ARIEL

CAMBRIDGE 43” SINGLE SINK VANITY SET

MODEL: A043S

Cabinet Size	42”W x 21.5”D x 33.5”H
Mirror Size	42”W x 35”H
Features	• Solid Wood Construction • Two Soft-Closing Doors • Nine Full-Extension, Dove-Tail Construction, Soft-Closing Drawers • Satin Nickel Finish Hardware • Matching Framed Mirror Included

COLLECTION:

ARIEL CAMBRIDGE

FRONT

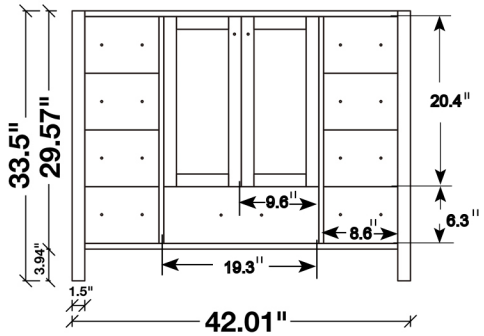

BACK VIEW

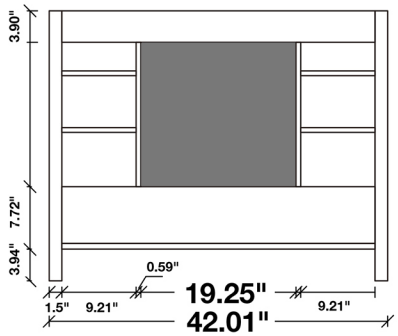

SIDE VIEW

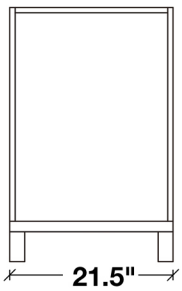

MIRROR VIEW

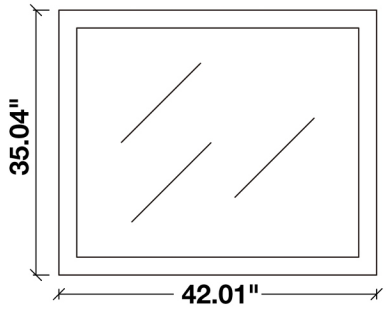

CARRARA WHITE MARBLE COUNTERTOP

MODEL: A043S-CT

Dimensions	43”W x 22”D x 1.5”H
Features	• Carrara White Marble Countertop w/ 1.5” Edge and Matching Backsplash • Countertop Pre-Drilled for 8” Widespread Faucets • One Ceramic, Round, UPC Certified Under-Mount Sink • Matching Backsplash Included

All stone tops are finished by hand, pre-drilled for 8” widespread faucets, and double-sealed for scratch resistance and long term durability.

BACKSPLASH

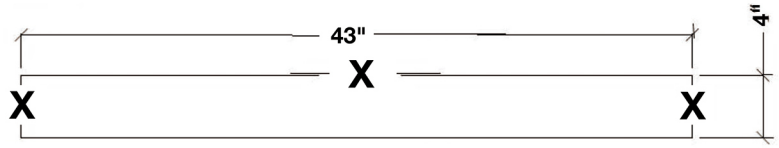

TOP VIEW

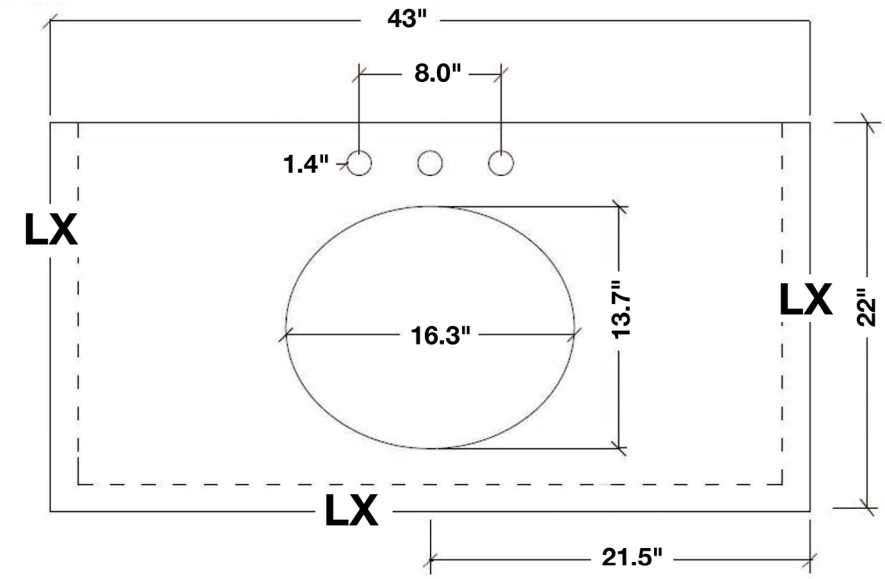
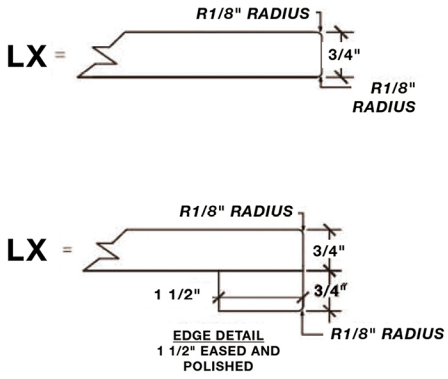
1.5” EDGE SIDE VIEW