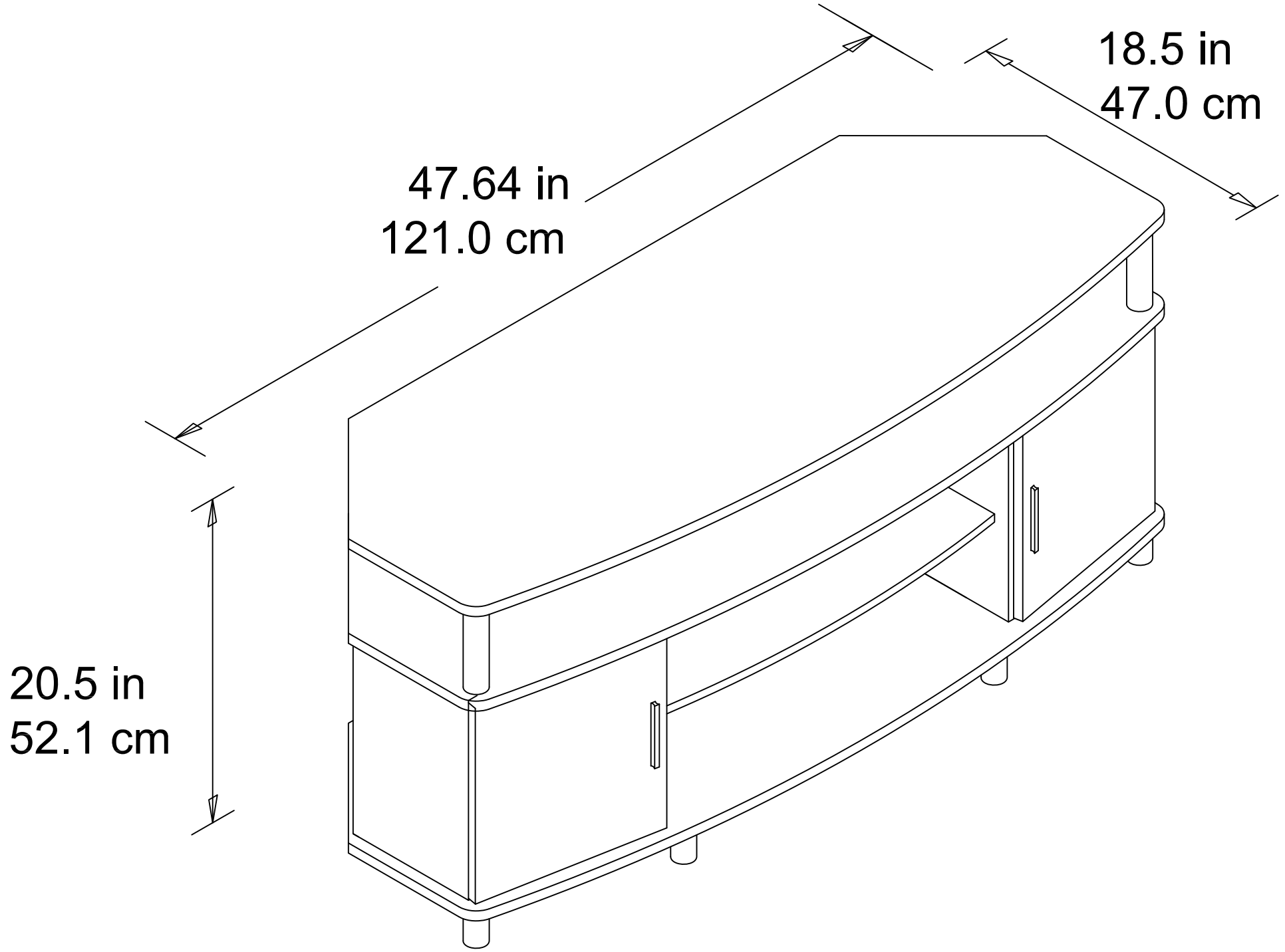
18.5 in
47.0 cm
47.64 in
121.0 cm
20.5 in
52.1 cm