Specifications

Builders 2-Handle Deck-Mount Roman Tub Faucet

MODEL	STORE SKU #	FINISH
461-3001	533305	Polished Chrome
461-3004	816117	Brushed Nickel PVD

FEATURES

- Requires 3-Hole Sink with 8"-16" On-Center
- 1/2" IPS Connections
- Max Countertop Thickness: 2 1/16"
- Spout Reach: 7 11/16"
- Spout Height: 6 7/8"
- 1/4 Turn ceramic for Lifetime Drip-free Operation
- With Zinc Lever Handle

CODE COMPLIANCE

- IAPMO Certified: ASME A112.18.1/CSA B125.1
- ADA Compliant

WARRANTY

- Limited Lifetime Warranty

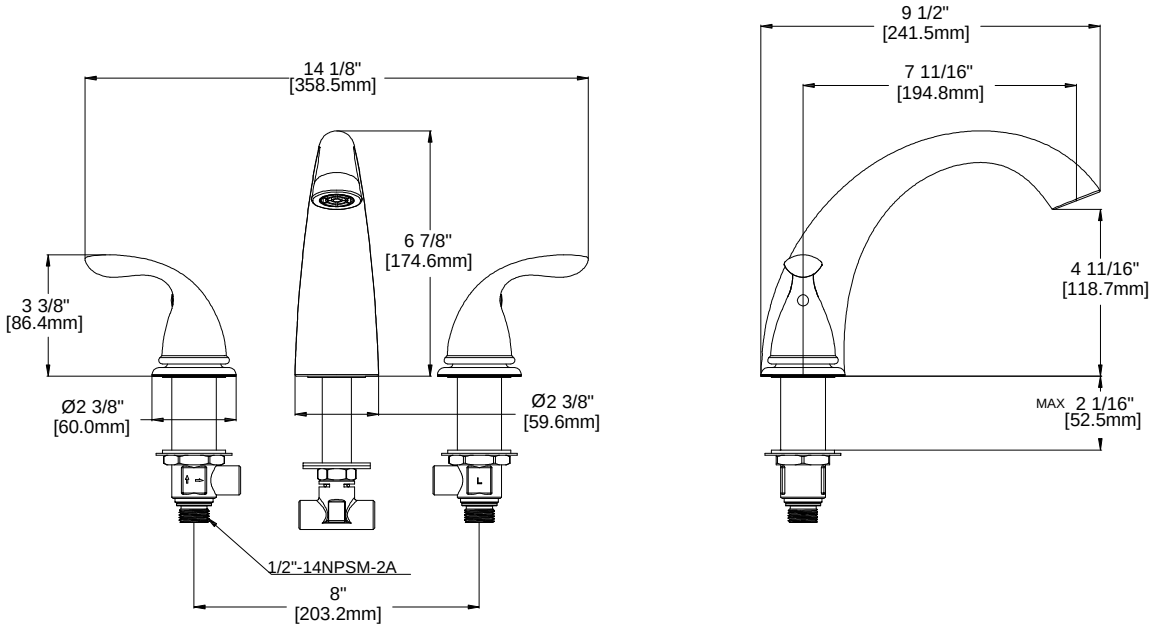

INSTALLATION DIMENSIONS

Glacier Bay reserves the right to make changes in specifications and materials and to change and discontinue models, both without notice or obligation. Dimensions are for reference only.