DESIGNHOUSE

Part #: 559005, 559047, 559013
559021, 559054, 559062

ASSEMBLY INSTRUCTIONS

Espresso & White Two Door Vanity Base Cabinet

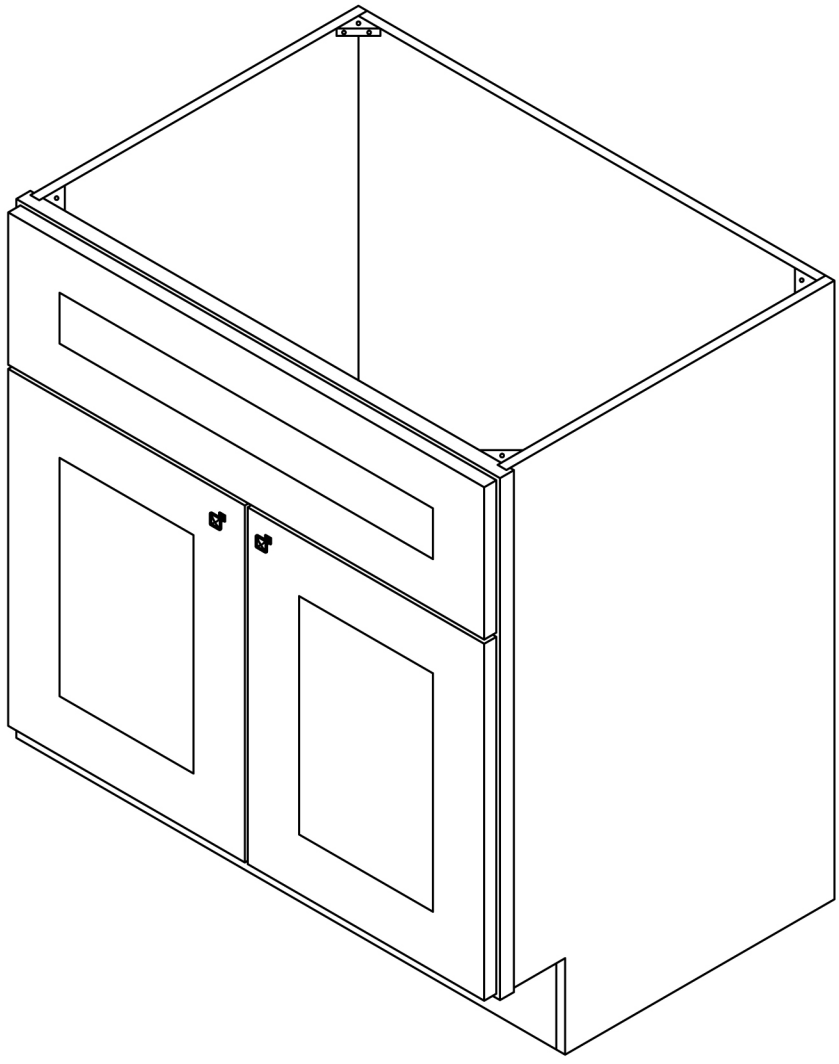

Unpacking Precautions

If using a sharp object to unpack the vanity components and the packing materials, be careful to avoid scratching or damaging the vanity components. The various packing materials may be used to protect the vanity components during assembly. During the unpacking process, place the various components away from and to the side of the work area so that they will not be inadvertently knocked over or otherwise damaged.

Required Tools

Phillips Screwdriver
Rubber Mallet
Wood Glue

PARTS LIST

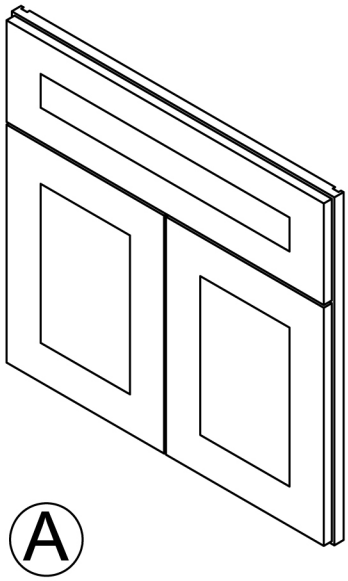

FRONT PANEL 1PC

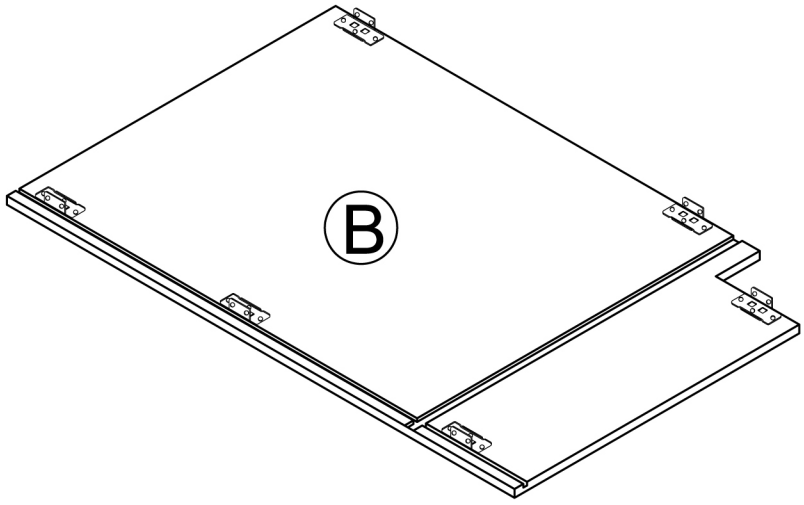

RIGHT SIDE PANEL 1PC

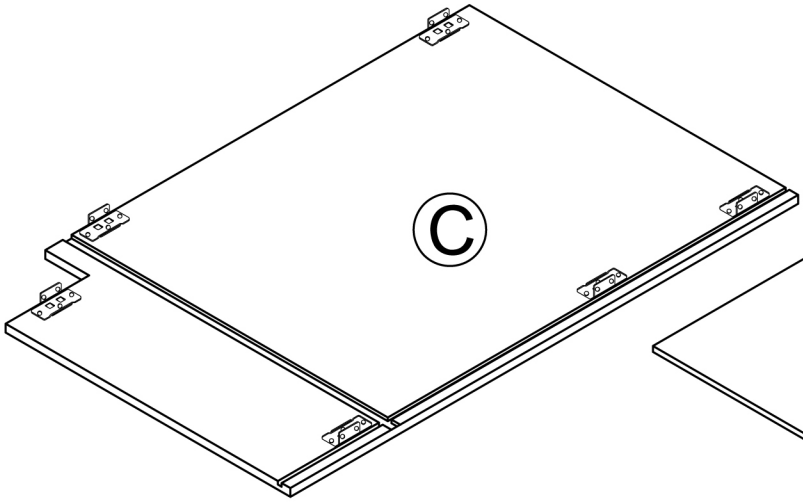

LEFT SIDE PANEL1PC

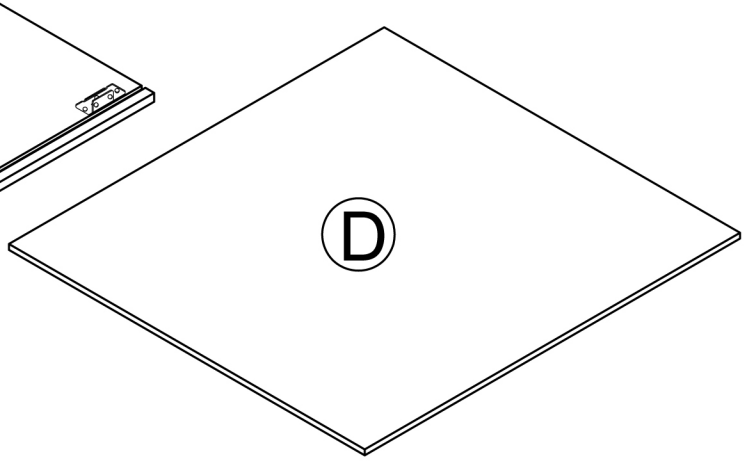

BOTTOM PANEL 1PC

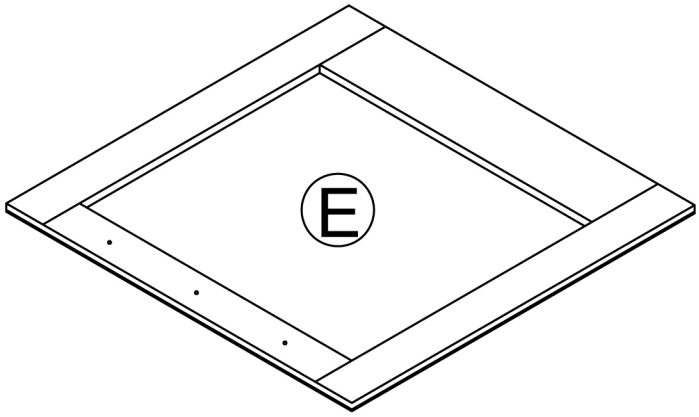

BACK PANEL 1PC

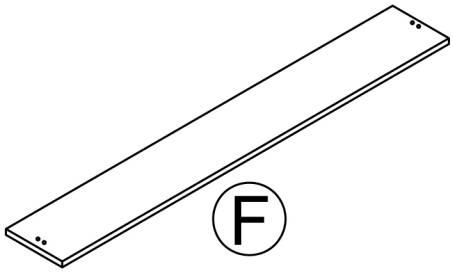

TOE KICK 1PC

HARDWARE LIST

a. KNOB 2PCS

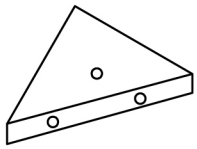

b. WOODEN TRIANGLE 4PCS

c. RUBBER BUMPER 4PCS

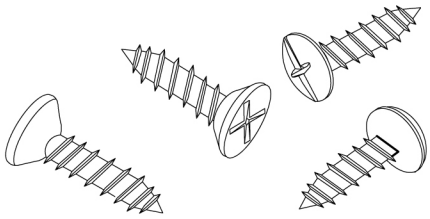

d. 1/2" FLAT (ROUND)HEAD SCREW 24PCS
ROUND HEAD SCREW FOR ESPRESSO
METAL CLIP ONLY

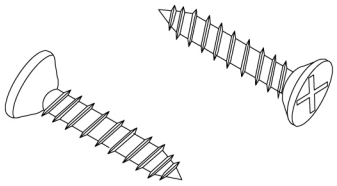

e. 7/8" FLAT HEAD SCREW 8PCS

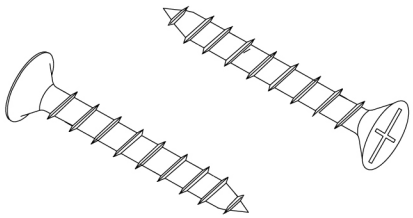

f. 1-1/8" FLAT HEAD SCREW 7PCS（3
PCS FOR ATTACHING THE BACK
PANEL TO THE BOTTOM
PANEL，4PCS FOR CONNECTING TO
THE COUNTERTOP)

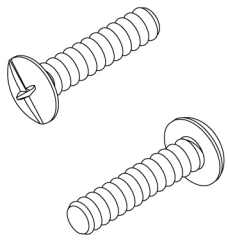

g. KNOB SCREW FOR DOOR 1" 2PCS

Step 1
Lay the face frame with doors (A) on the soft surface, doors facing down.

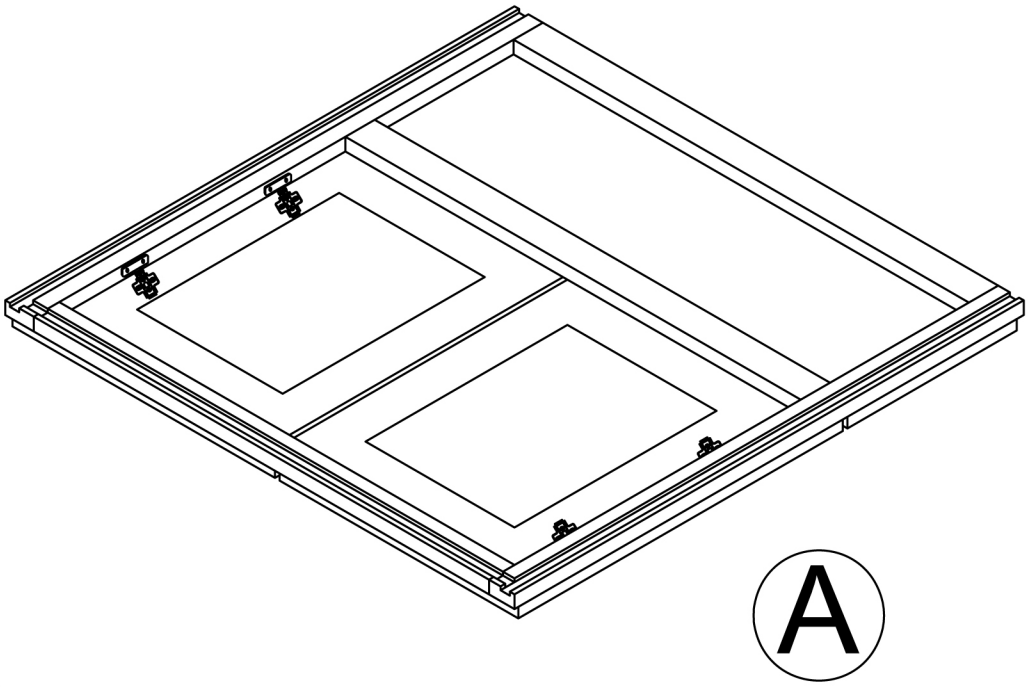

Step 2
Attached rubber bumpers to both the top and bottom of each door where they make contact with the face frame to prevent damage and reduce noise.

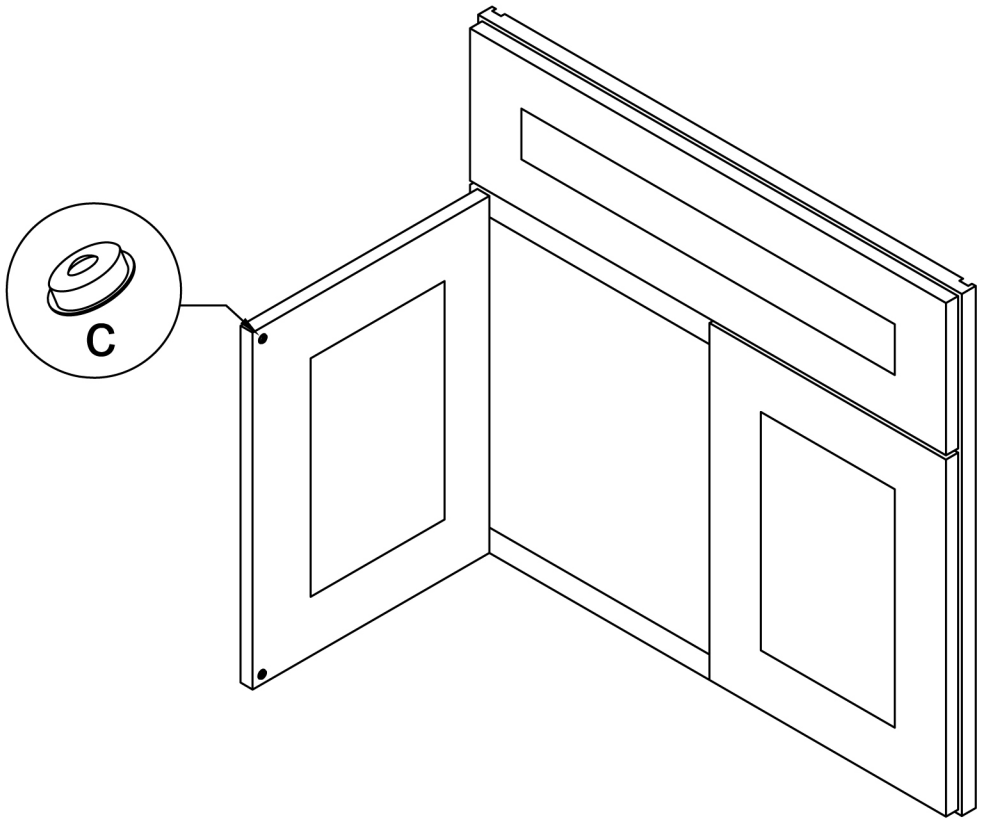

Step 3

Using the wood glue, squeeze a small bead of glue in all grooves before assembling the cabinet sides, bottom, top and back panels. Be careful not to use too much glue, this could cause access glue to squeeze out and onto the panels, if this should happen, be sure to remove quickly.

Step 4

Slide the Right side panel (B) into the groove of the face frame, and mount the male clip to the face frame with the screwdriver. Each male clip will need 2 small screws (d).

Slide the Left side panel (C) into the Left groove of the face frame, and mount the male clip to the face frame with a screwdriver. Each male clip will need 2 small screws (d).

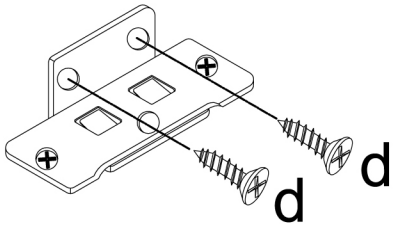

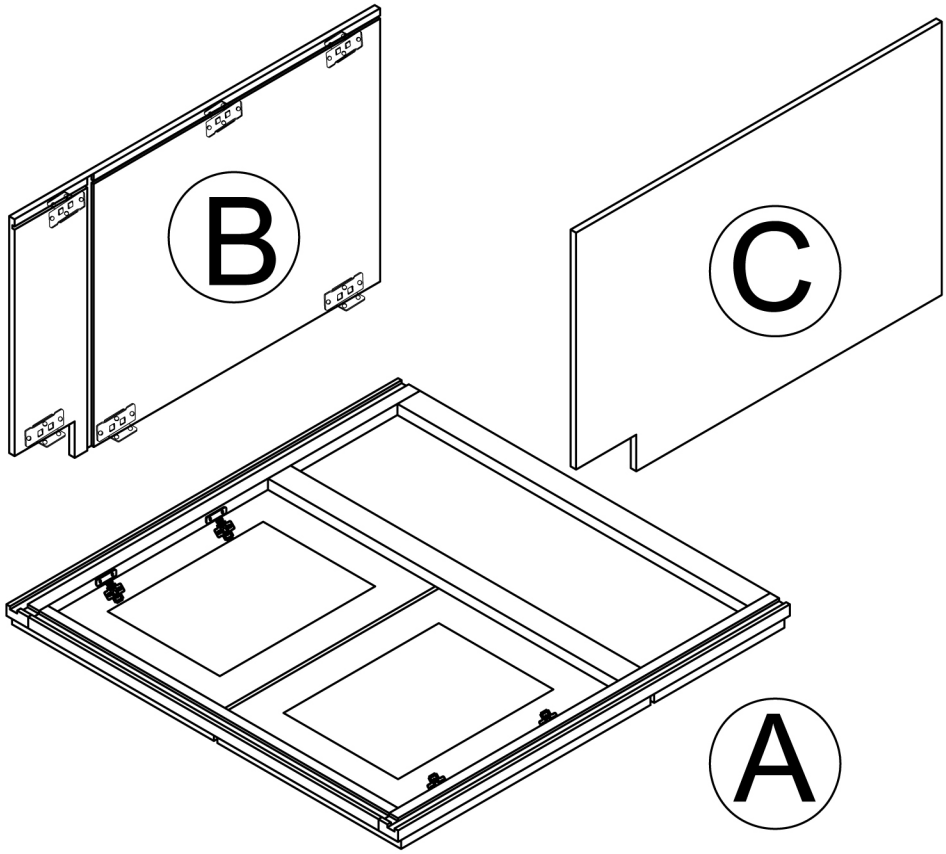

Step 5

Slide bottom panel (D) into the groove of the right and left side panels, and then into the groove in the frame below until it is fully seated. Slide in the back panel (E) and attach the male clips to the back panel. There are three clips on the left side and three clips on the right side. Each male clip will need 2 small screws (d).

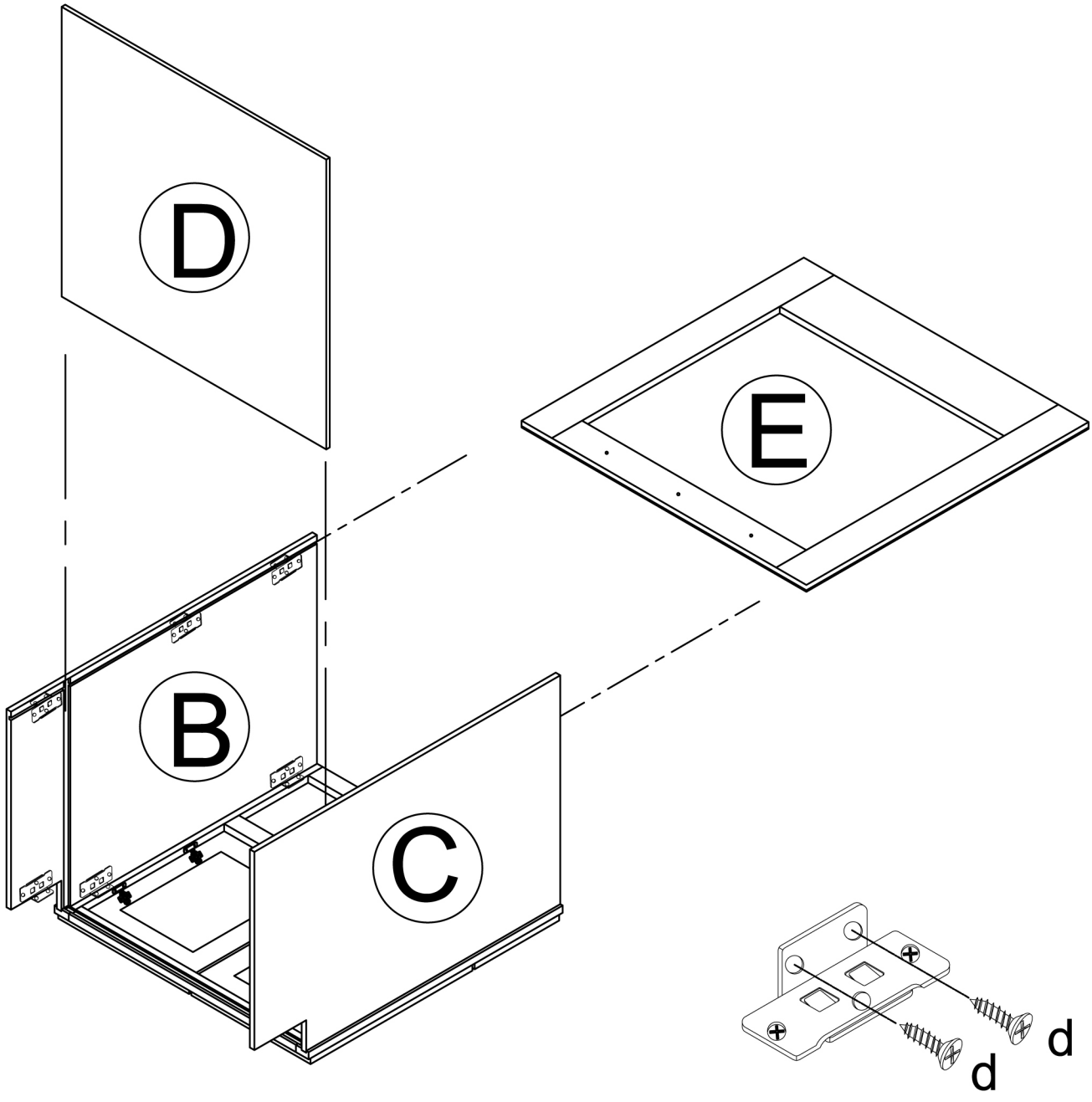

Step 6

Use the long screws (f), to attach the back panel to the edges of the bottom panels. Using the pre-drilled holes provided. Secure the toe kick (F) into the bottom of the cabinet ,two small screws (d) in each of the two clips.

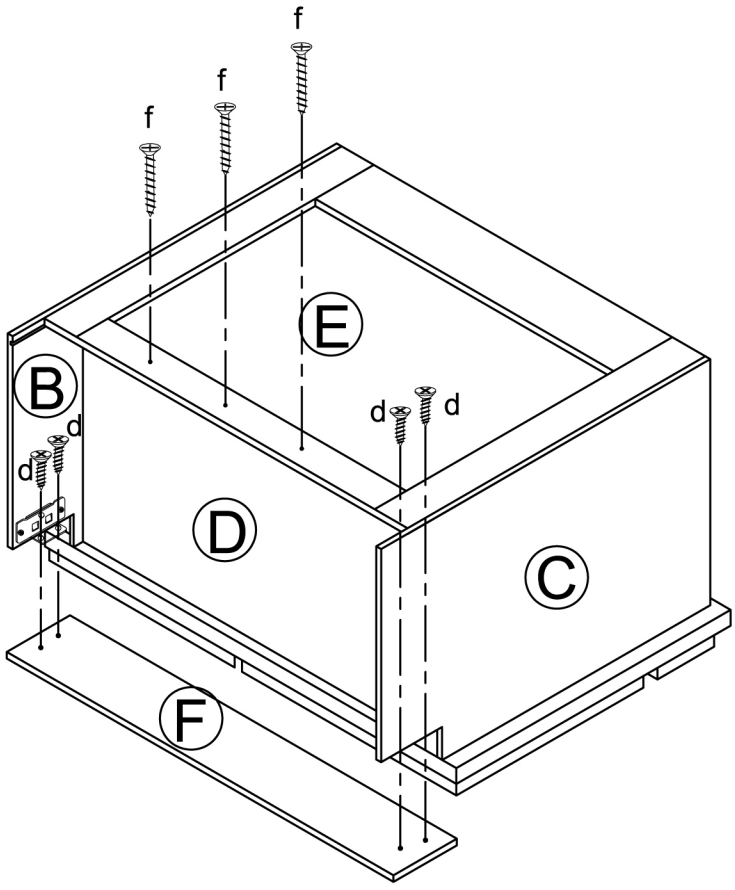

Step 7

Install knobs (a). Pilot holes are provided on the back of the doors. If this is your desired location, use a drill to complete drilling the holes through the door, then install the knobs (a) with screws (g) provided.

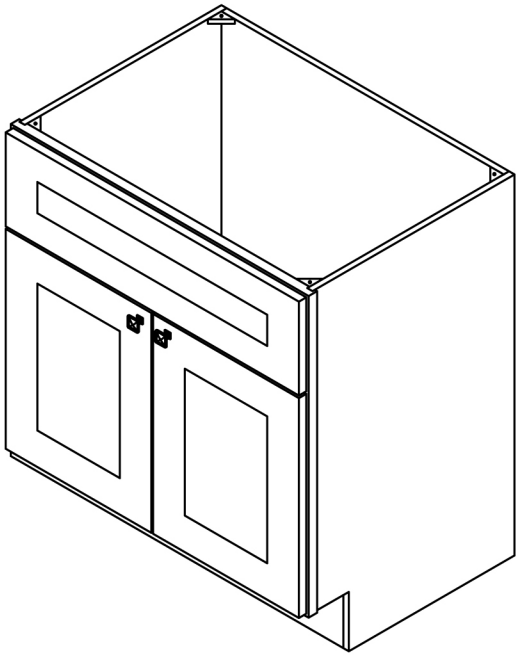

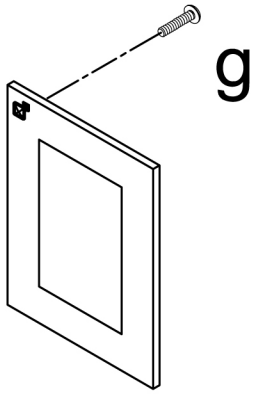

Step 8
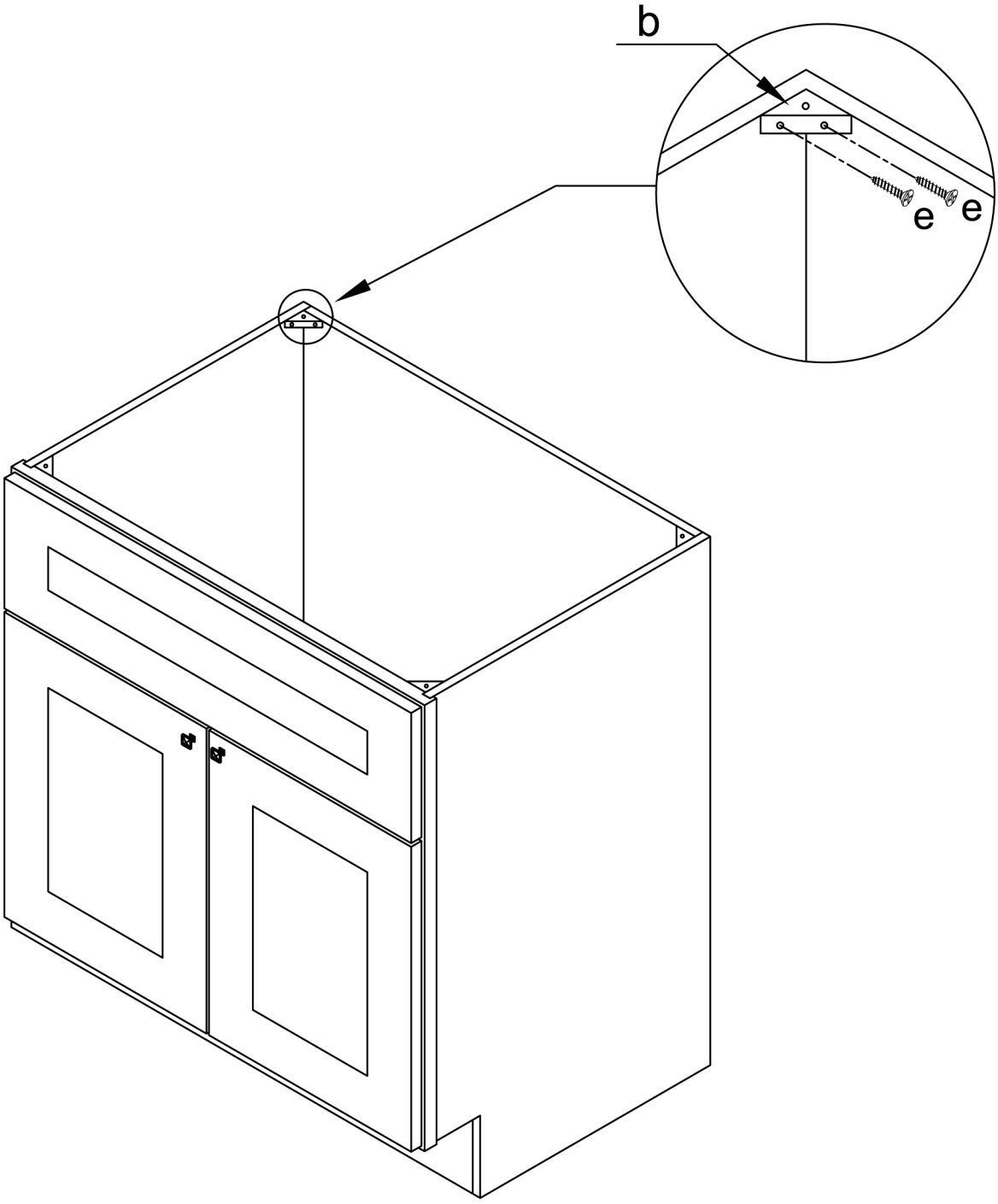
Use two middle size screws (e) to attach 4 wooden triangle blocks (b) in all four corners of the top of the cabinet.