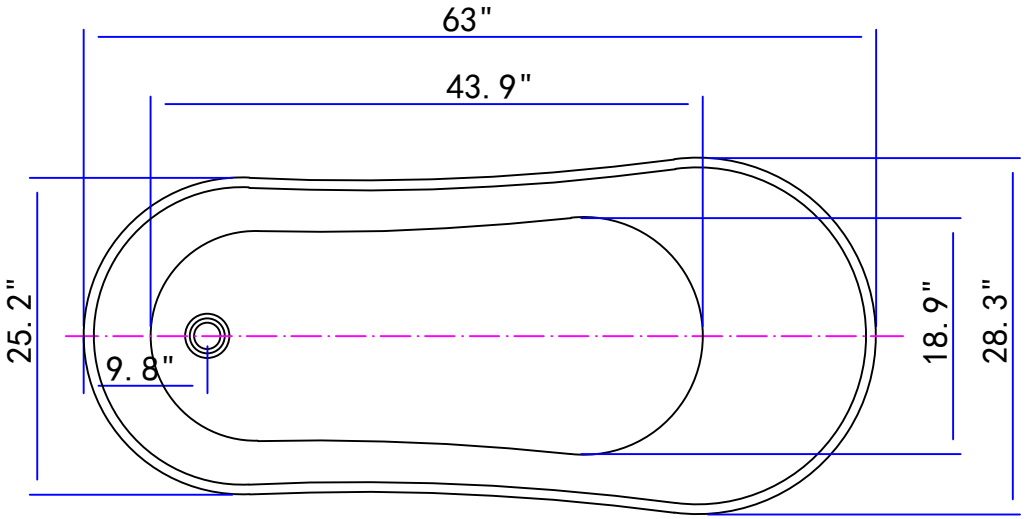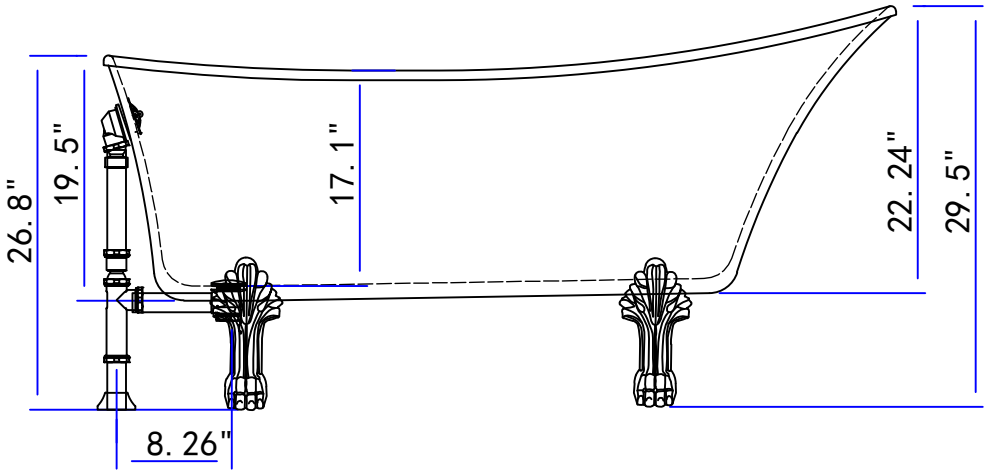Streamline