HOME

DECORATORS

COLLECTION

INDUSTRIAL MANSARD BOOK SHELF

Assembly Instructions

HDC#:1002960944/1002960943

MFG#:OME-66002-1/OME-66002-2

Please read over the instructions; it will be a time-saver in the long run.

Note: Before Assembly, please be sure to work on a soft flat surface to avoid any damage to the finish.

Furniture Tipping Restraint

Young children may be injured by tipping furniture and the use of a tipping restraint is highly recommended. This hardware, when properly installed, could provide protection against the unexpected tipping of furniture due to improper use.

Warning: This product is only a deterrent and is not a substitute for proper adult supervision.

Follow instruction printed on the White bag inside the hardware for this unit .

You must install the hardware with the product in use.

Parts Check List

Please remove all the parts carefully from the box. Thoroughly clean all parts surfaces to remove dust and dirt that may have settled onto the finish.

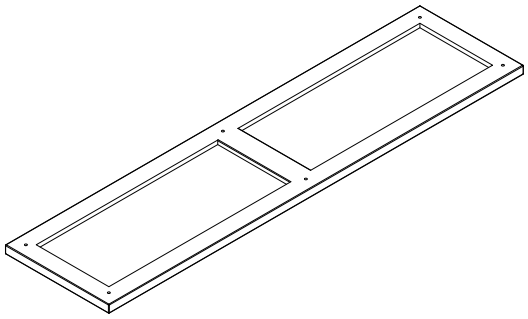

① Top panel - 1 PC

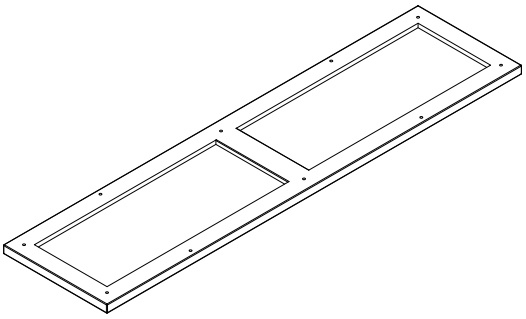

② Middle panel - 3 PCS

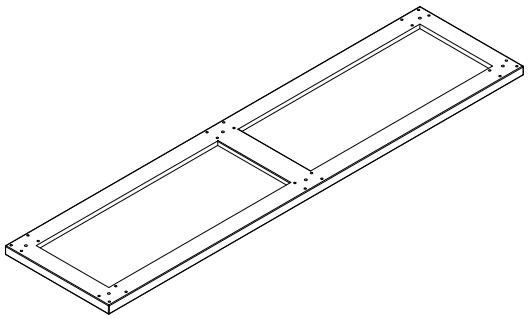

③ Bottom panel - 1 PC

④ Connecting tube - 24 PCS

Hardware Check List

Please take all hardware out of the hardware bag.

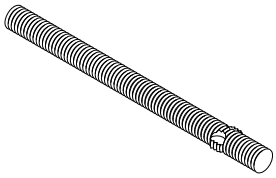

A
Screw stick - 24 PCS
1/4"× 3-1/8"

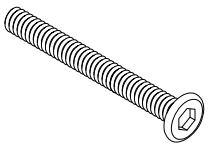

B
Allen bolt - 6 PCS
1/4"× 2"

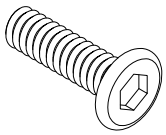

C
Allen bolt - 24 PCS
1/4"× 5/8"

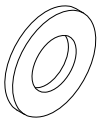

D
Flat washer-30 PCS
φ13× 1.0

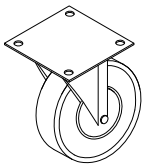

E
Wheel - 6 PCS
4"

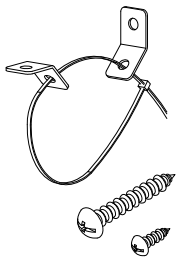

F
Anti-Tip Hardware - 2 SET

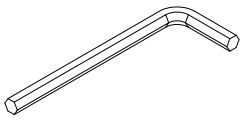

G
Allen key - 1 PC
M4

Do not tighten screws until completely assembled!!

Step:1

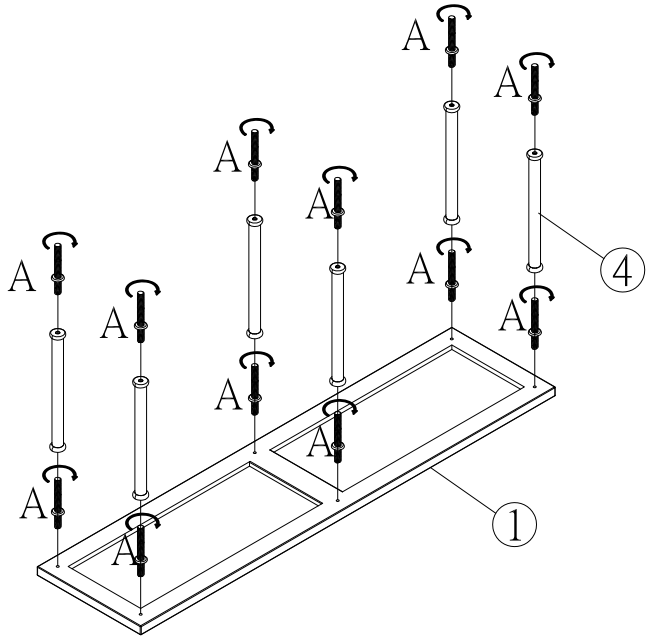

Step:2

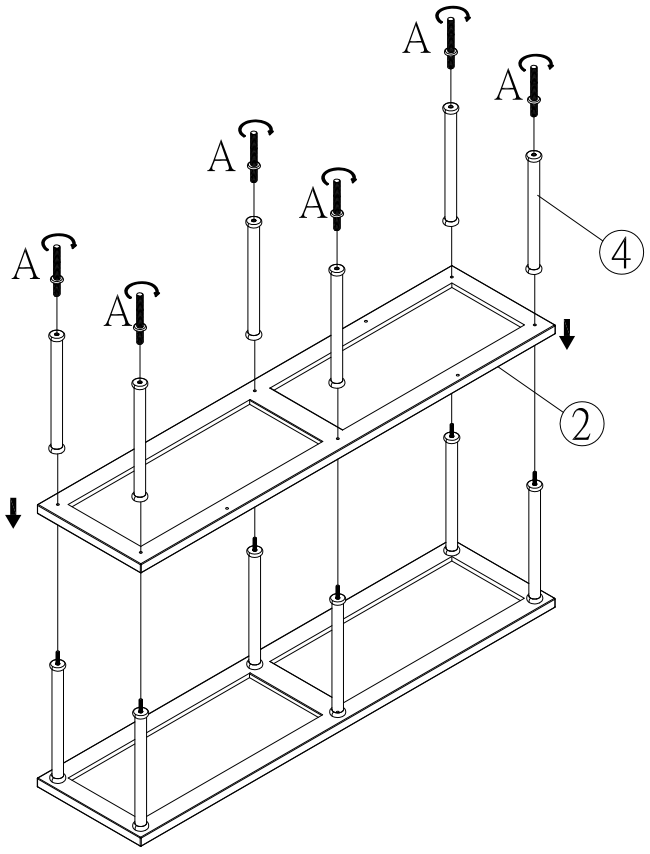

Step:3

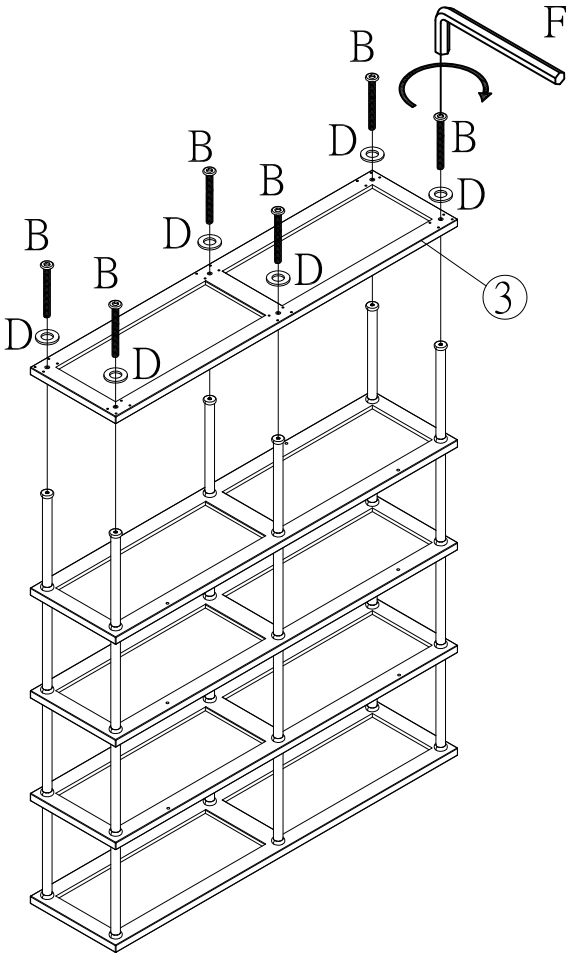

Step:4

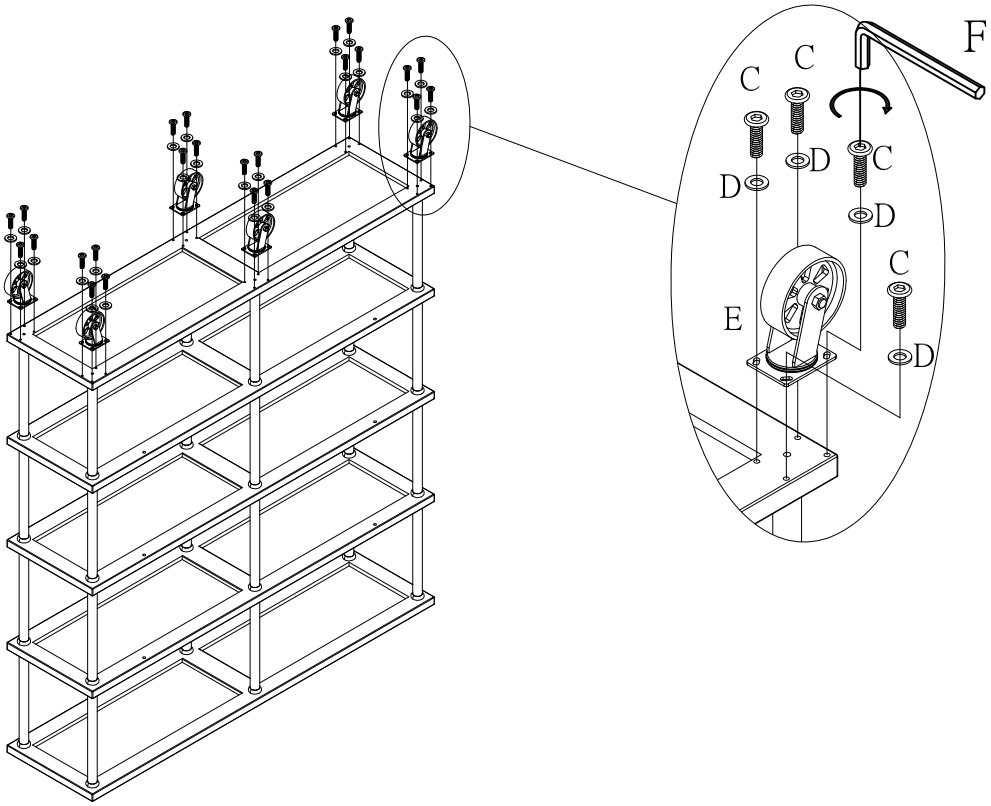

Step:5

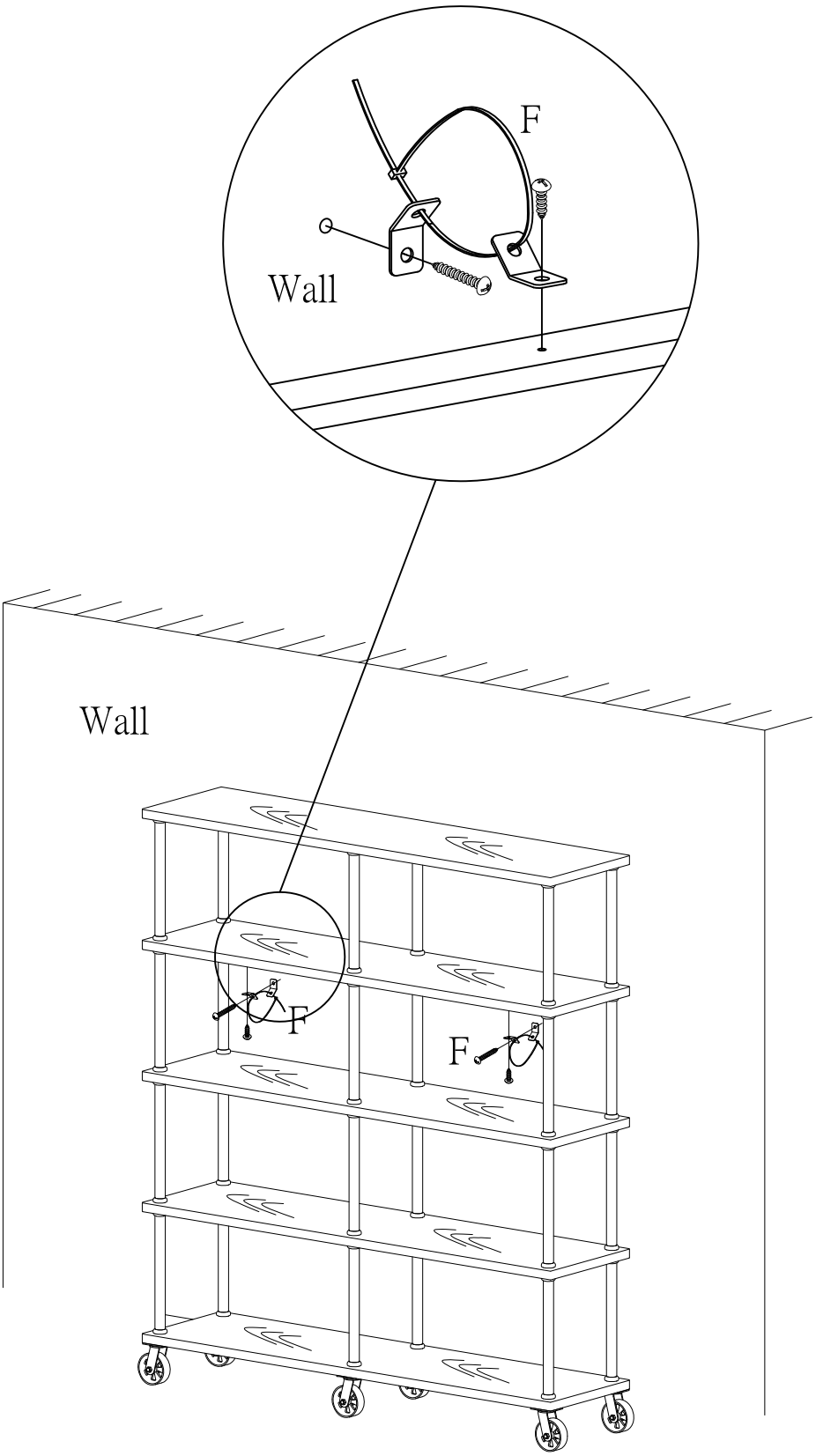

Assembly is completed!

HOME
DECORATORS
COLLECTION

Care and Cleaning

- For best results, clean the furniture with a damp cloth and dry thoroughly. This will help prevent mildew by removing dirt particles that may accumulate.

- Do not clean with abrasive materials, bleach, or solvents.

- Store the furniture in a dry sheltered place when not in use.

- Keep the furniture out of fire, extreme heat, freezing conditions, and inclement weather such as rain, hail, sleet, snow, or wind.

Note: Periodically check bolts and re-tighten as necessary. Keep Allen Wrench and Screw Driver for future use.Retain this manual for future use.