Item # 1001 414 658
Model # YJAF052

# USE AND CARE GUIDE

## 11 FT. LED OFFSET SOLAR UMBRELLA

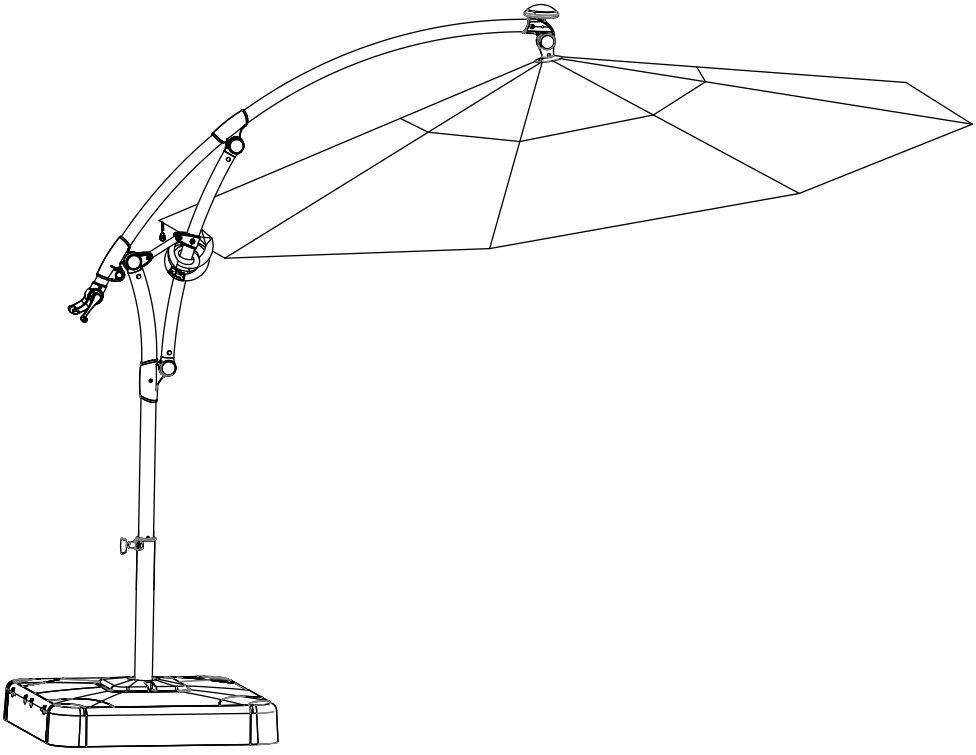

Questions, problems, missing parts? Before returning to the store,
call Hampton Bay Customer Service.
8 a.m. - 7 p.m., EST, Monday - Friday, 9 a.m. - 6 p.m., EST, Saturday

**1-855-HD-HAMPTON**

**HAMPTONBAY.COM**

***THANK YOU***

*We appreciate the trust and confidence you have placed in Hampton Bay through the purchase of this umbrella. We strive to continually create quality products designed to enhance your home. Visit us online to see our full line of products available for your home improvement needs. Thank you for choosing Hampton Bay!*

# Table of Contents


**Table of Contents** ..... 2
**Safety Information** ..... 2
- Product Caution ..... 2
- Safety Warnings ..... 2

**Warranty** ..... 2
- What is Covered ..... 2
- What is Not Covered ..... 2

**Pre-Assembly** ..... 3
- Planning Assembly ..... 3
- Hardware Included ..... 3
- Package Contents ..... 4

**Assembly** ..... 5
**Operation** ..... 18
**Care and Cleaning** ..... 24
**Maintenance** ..... 25


# Safety Information

## PRODUCT CAUTION

This umbrella was made for the explicit purpose of providing outdoor functions and is not to be used as a toy. This product is intended for normal outdoor use; however, the manufacturer recommends storing and / or covering this umbrella when any formidable / severe weather is approaching. Do not locate the product near open flame. Do not use the product as a support. Do not shake, lean or climb on product. Children under the age of 10, near the product, should be supervised by a competent adult at all times. This product is NOT intended for commercial use and will void the warranty.

## SAFETY WARNINGS

**WARNING:** Please keep children out of the assembly area before assembly.

**WARNING:** This umbrella unit is heavy, and may require two adults for safe assembly.

**WARNING:** Never use this product as a support. Do not shake, lean, or climb on the product at any time.

**CAUTION:** Always close and secure the product when not in use and in the event of inclement weather.

**CAUTION:** Never use the umbrella in high wind conditions. Damage to the umbrella can occur.

**CAUTION:** Keep all flame and heat sources away from this product at all times.

# Warranty

## 1 YEAR FRAME AND FABRIC WARRANTY

## WHAT IS COVERED

We warrant the frame and fabric to be free of manufacturing defects to the original purchaser for one year.

## WHAT IS NOT COVERED

It remains the customer's responsibility for freight and packaging charges to and from our service center. This warranty does not cover commercial use, hardware, acts of nature, fire, freezing, and abusive use. In addition, purchase parts are not covered under this warranty. We reserve the right to make substitutions with similar merchandise, if the model in question is no longer in production.

Contact the Customer Service Team at 1-855-HD-HAMPTON or visit www.HamptonBay.com.

# Pre-Assembly

## PLANNING ASSEMBLY

Read all instructions before assembly.

To avoid damaging this product, assemble it on a soft, non-abrasive surface such as carpet or cardboard.

**NOTE:** More than one person may be required to complete the assembly of this product.

## HARDWARE INCLUDED

**NOTE:** Hardware not shown to actual size.

| Part | Description | Quantity |
|---|---|---|
| AA | M8x20 combination hex bolt | 4+1 |
| BB | M5x8 bolt | 2+1 |
| CC | Wrench | 1 |
| DD | Hex wrench | 1 |

# Pre-Assembly (continued)

## PACKAGE CONTENTS

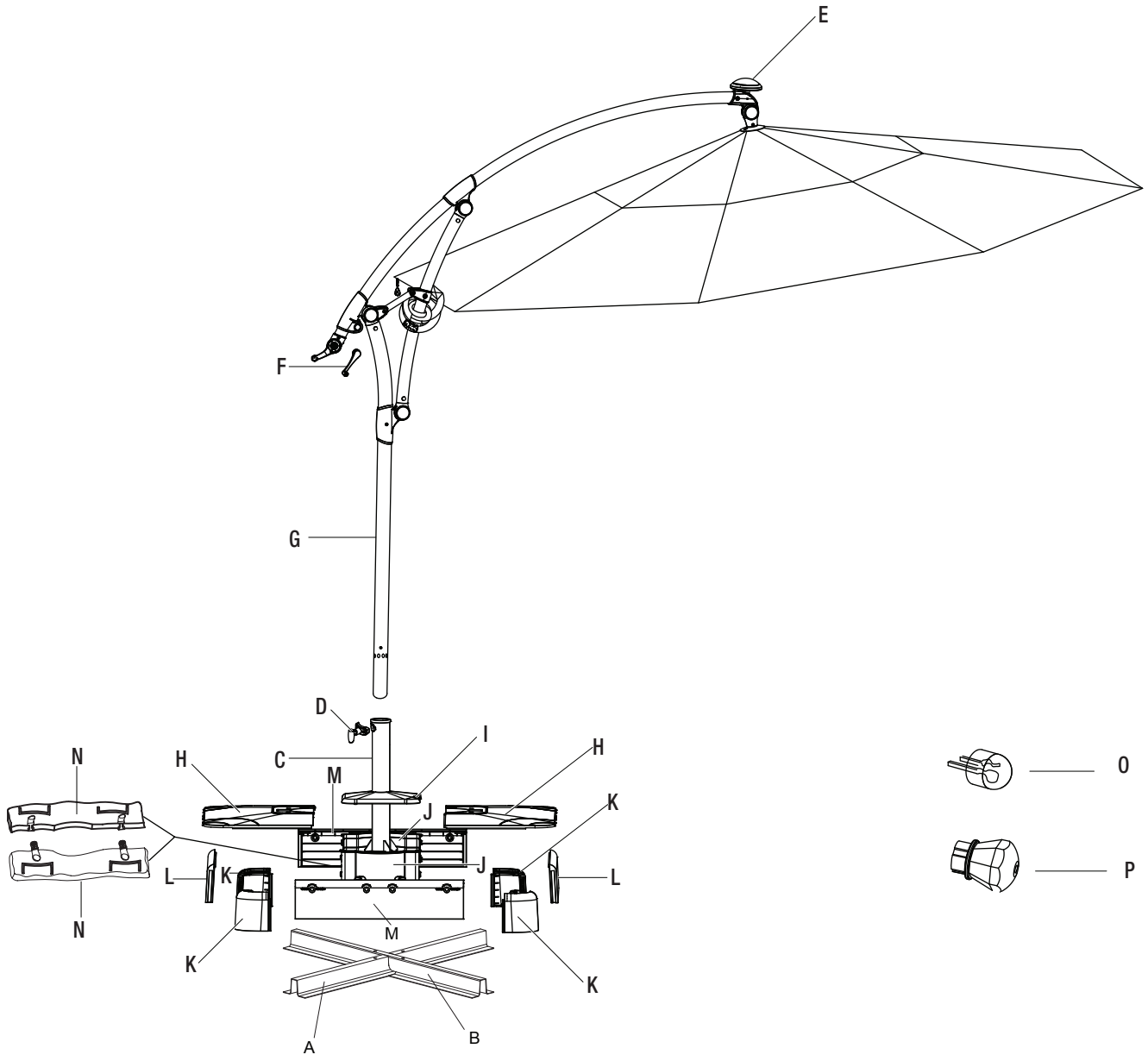


| Part | Description | Quantity |
|---|---|---|
| A | Lower bracket | 1 |
| B | Upper bracket | 1 |
| C | Lower umbrella pole | 1 |
| D | Locking knob | 1 |
| E | Solar receiver | 1 |
| F | Crank | 1 |
| G | Umbrella shade | 1 |
| H | Lower base cover | 2 |

| Part | Description | Quantity |
|---|---|---|
| I | Upper base cover | 1 |
| J | Support tube rim | 2 |
| K | Corner connector | 4 |
| L | Side panel | 2 |
| M | Lock panel | 2 |
| N | Sand bag | 1 |
| O | Replacement LED light | 4 |
| P | Replacement LED light cover | 4 |

# Assembly

## 1 Attaching the brackets

□ Attach the upper bracket (B) onto the lower bracket (A).

**NOTE:** This umbrella should be set up in its desired location to avoid moving it after assembly.

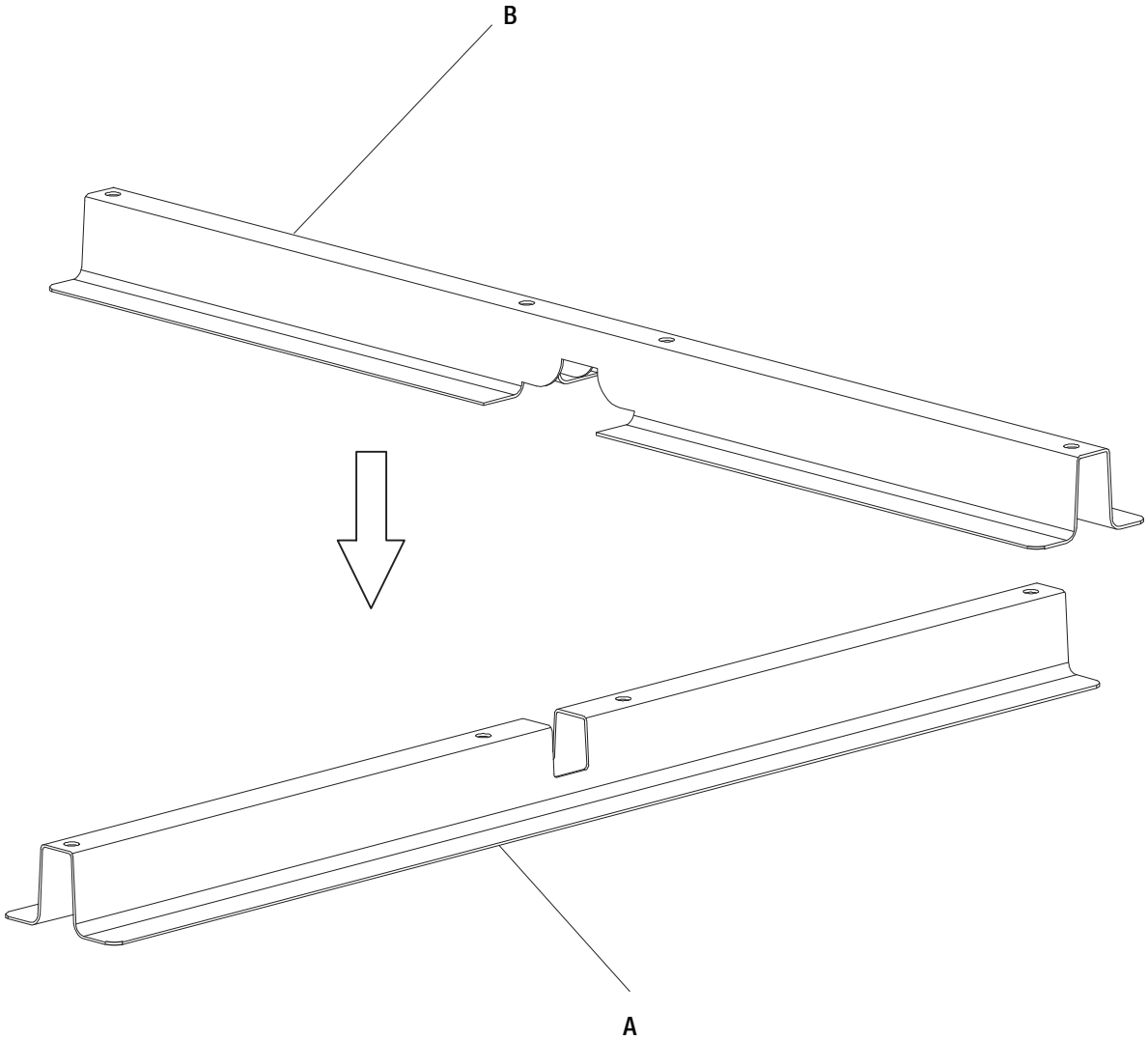

# Assembly (continued)

## 2 Attaching the lower umbrella pole to the brackets

☐ Attach the lower umbrella pole (C) to the upper bracket (B) and lower bracket (A) using M8x20 combination hex bolts (AA).

**NOTE:** Fully tighten all bolts using the wrench (CC).

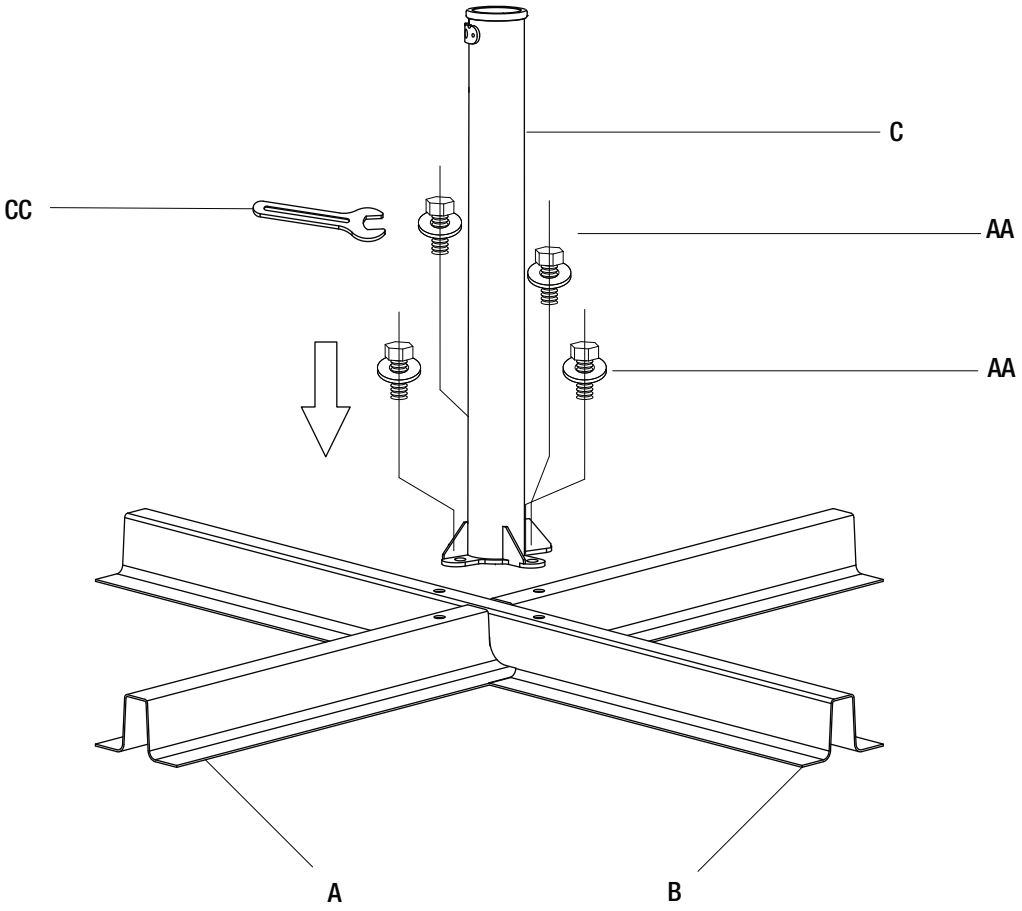

# Assembly (continued)

## 3 Inserting the corner connectors

□ Insert the corner connectors (K) into the four ends of the assembled brackets.

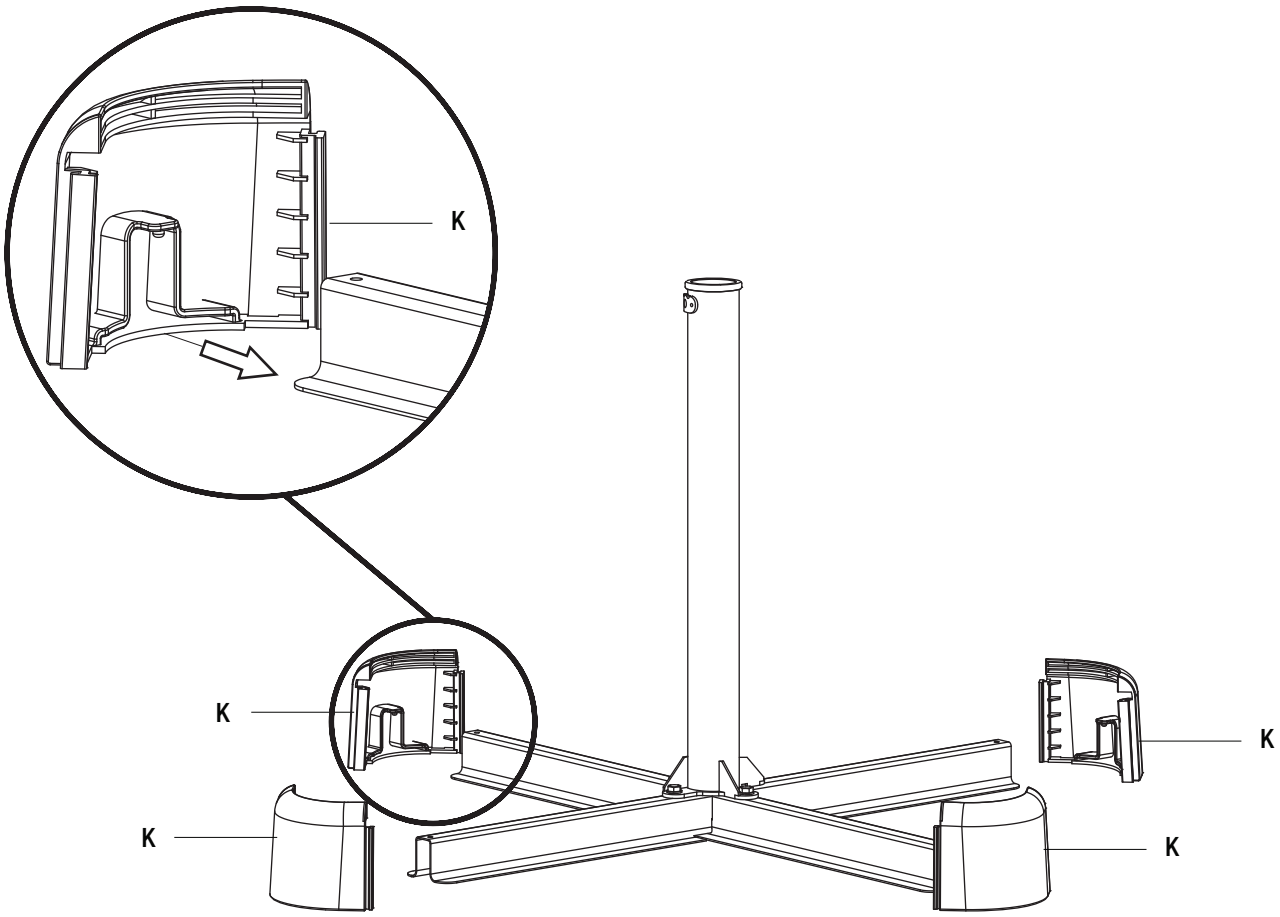

# Assembly (continued)

## 4 Sliding the lock panels

□ Slide the perforated lock panels (M) downward between the corner connectors (K).

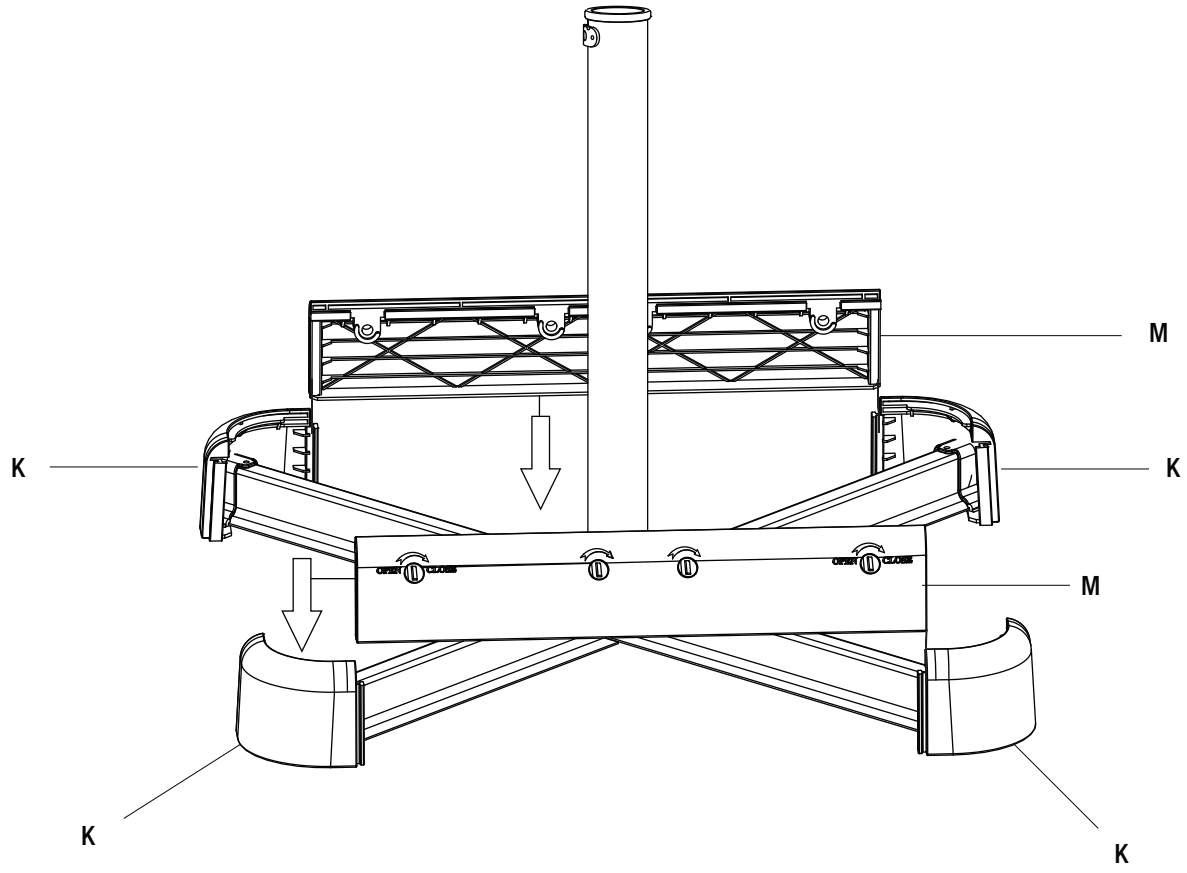

# 5 Sliding the side panels

- □ Slide the side panels (L) downward between the corner connectors (K).
- □ Connect the two pieces of the support tube rims (J).
- □ Slide the support tube rims (J) down the lower umbrella pole (C) and connect it to the brackets (A and B).

**NOTE:** Please pay attention to the direction of Part (J).

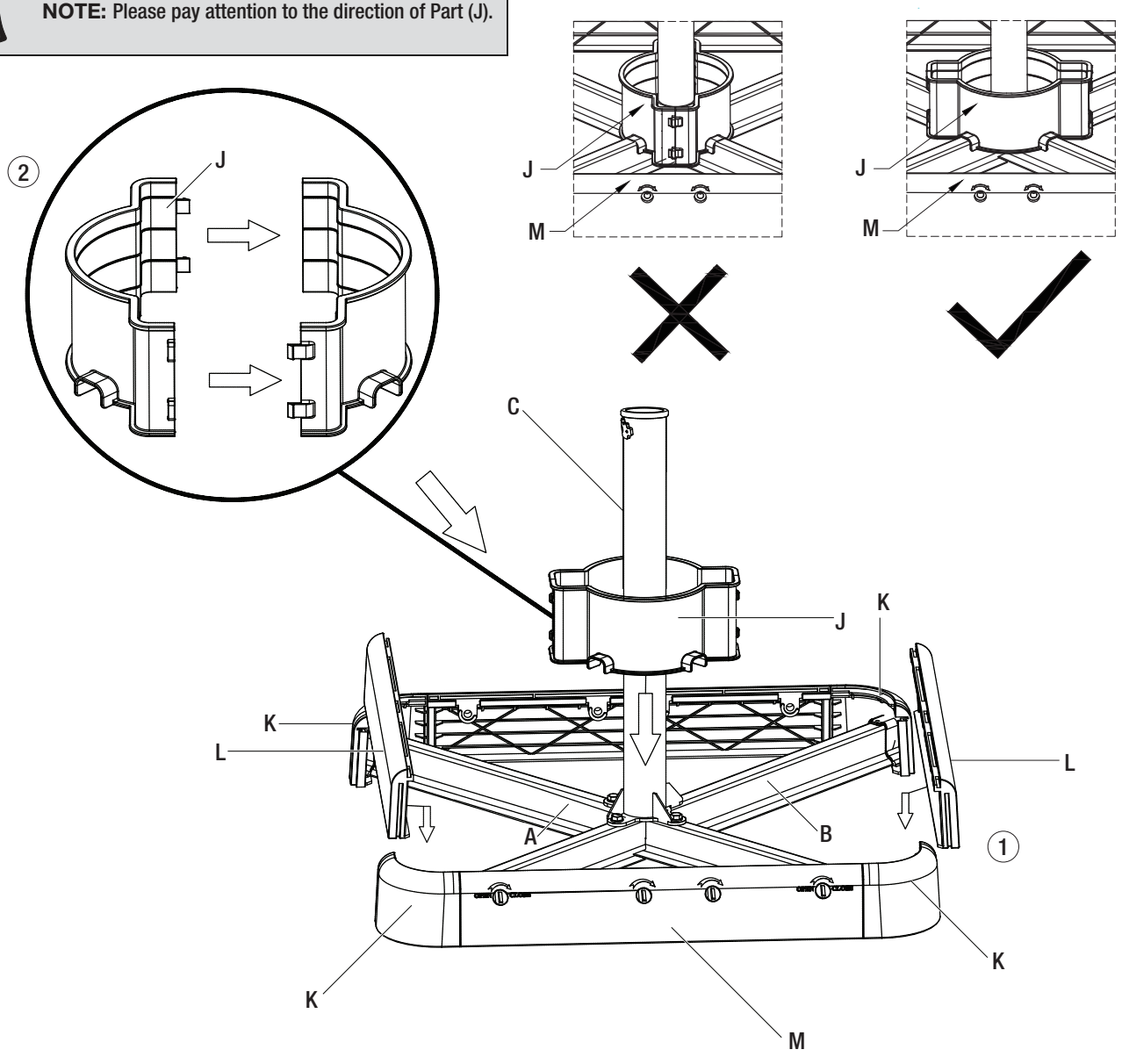

# 6 Placing the sand bags

□ Place the sand bags (N) in the umbrella base.

**NOTE:** Place the base in the area where the umbrella is to be used. The umbrella will be very heavy after filled with sand.

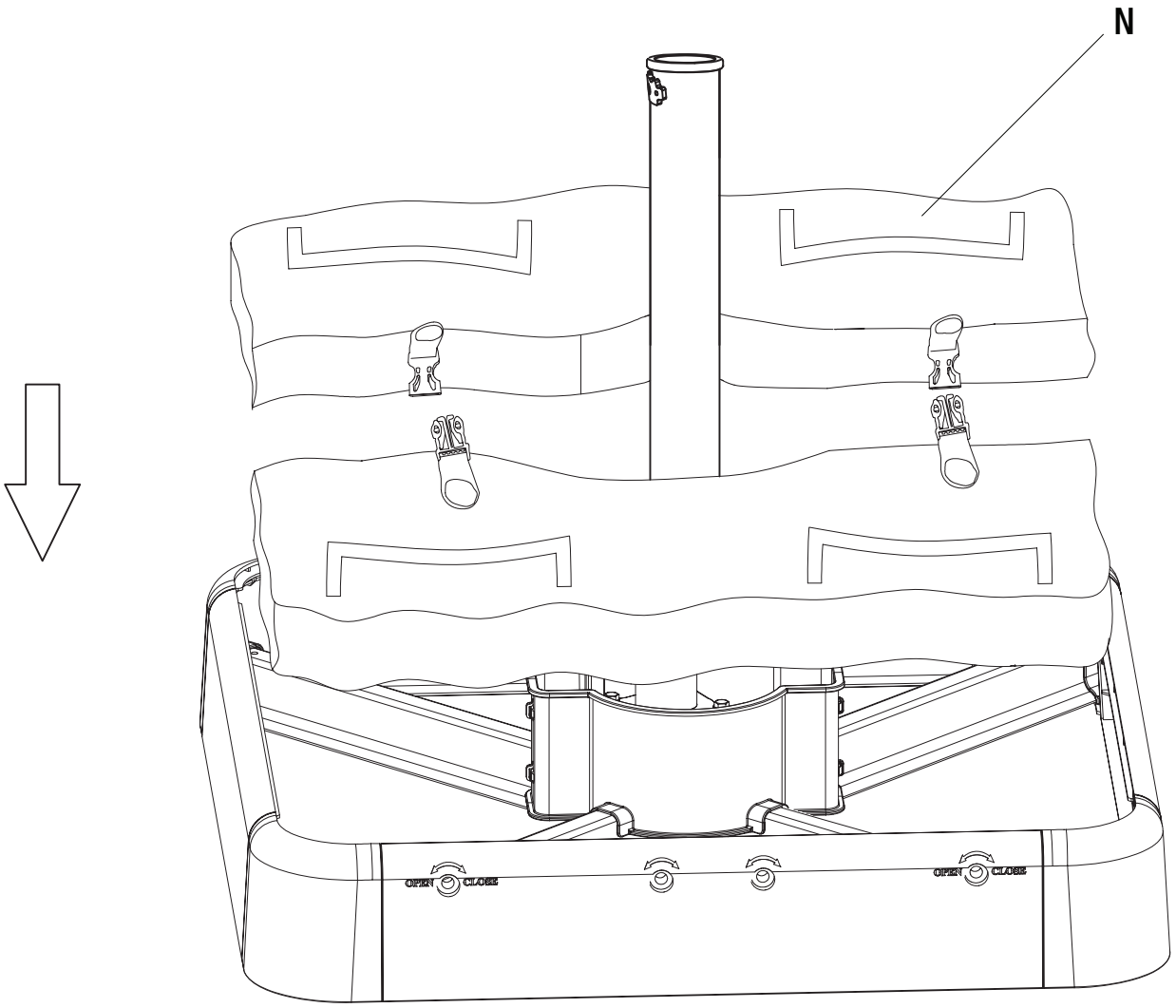

# 7 Filling the sand bags

- □ Pull to open the velcro pouch on the sand bag (N) and fill with sand.
- □ After filling the sand bags (N), close the pouch and ensure the velcro is sealed.
- □ Lock the two sections of the sand bags (N) together.

**NOTE:** The sand bags (N) are to be filled with sand only.

**NOTE:** For proper stability of the offset umbrella, please place 110 lbs of sand into each sand bag for a total of 220 lbs.

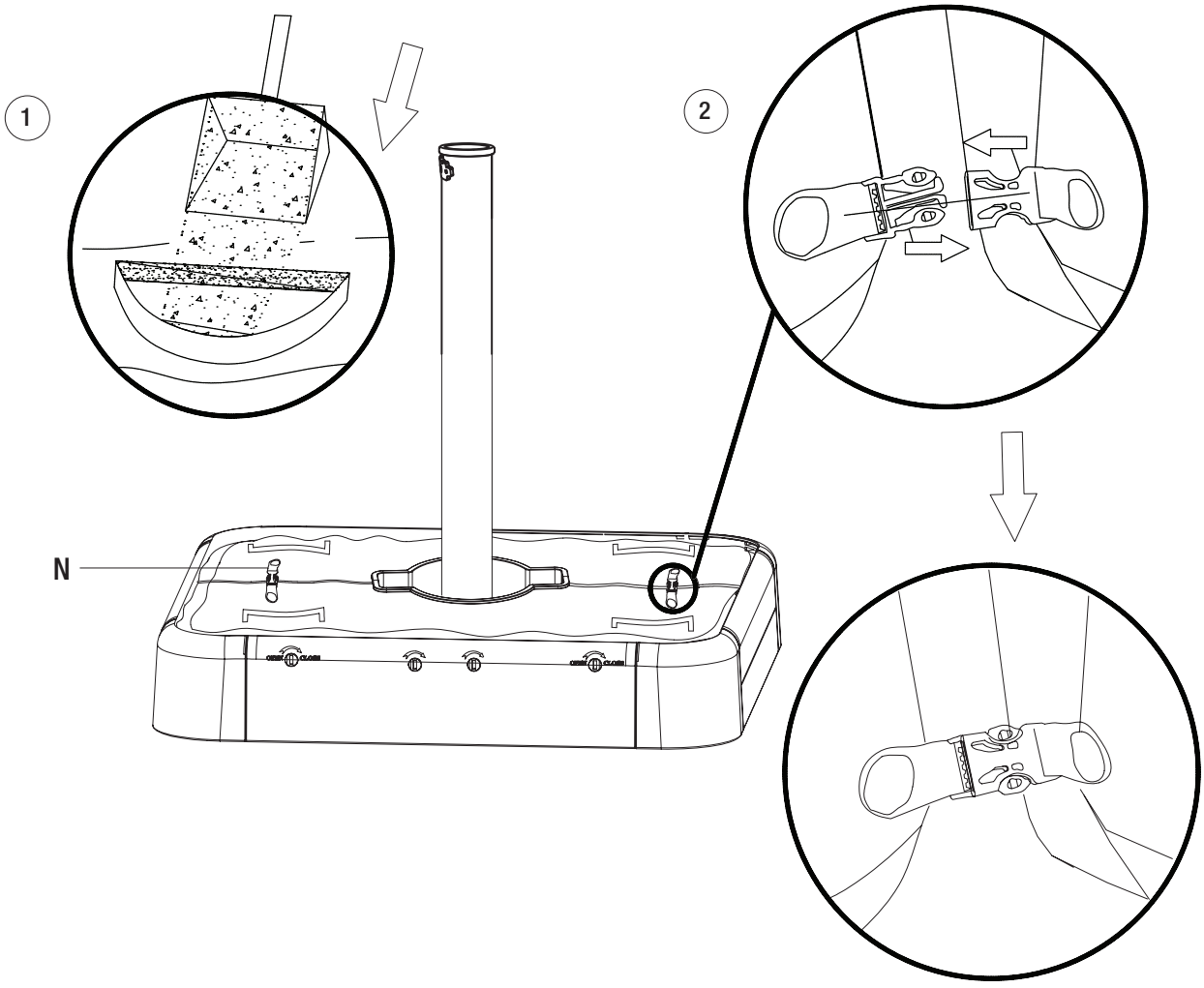

# Assembly (continued)

## 8 Ensuring the locking mechanism is in the open position

- □ Ensure the locking mechanism on the lock panel (M) is in the OPEN position by using the wrench (CC) as shown in figure 1.
- □ Ensure the locking mechanism on the lower base cover (H) is in the OPEN position by using the wrench (CC) as shown in figure 2.
- □ Attach the lower base cover (H) to the side panels (L).
- □ Close the lower base cover (H) and ensure they are fully closed.

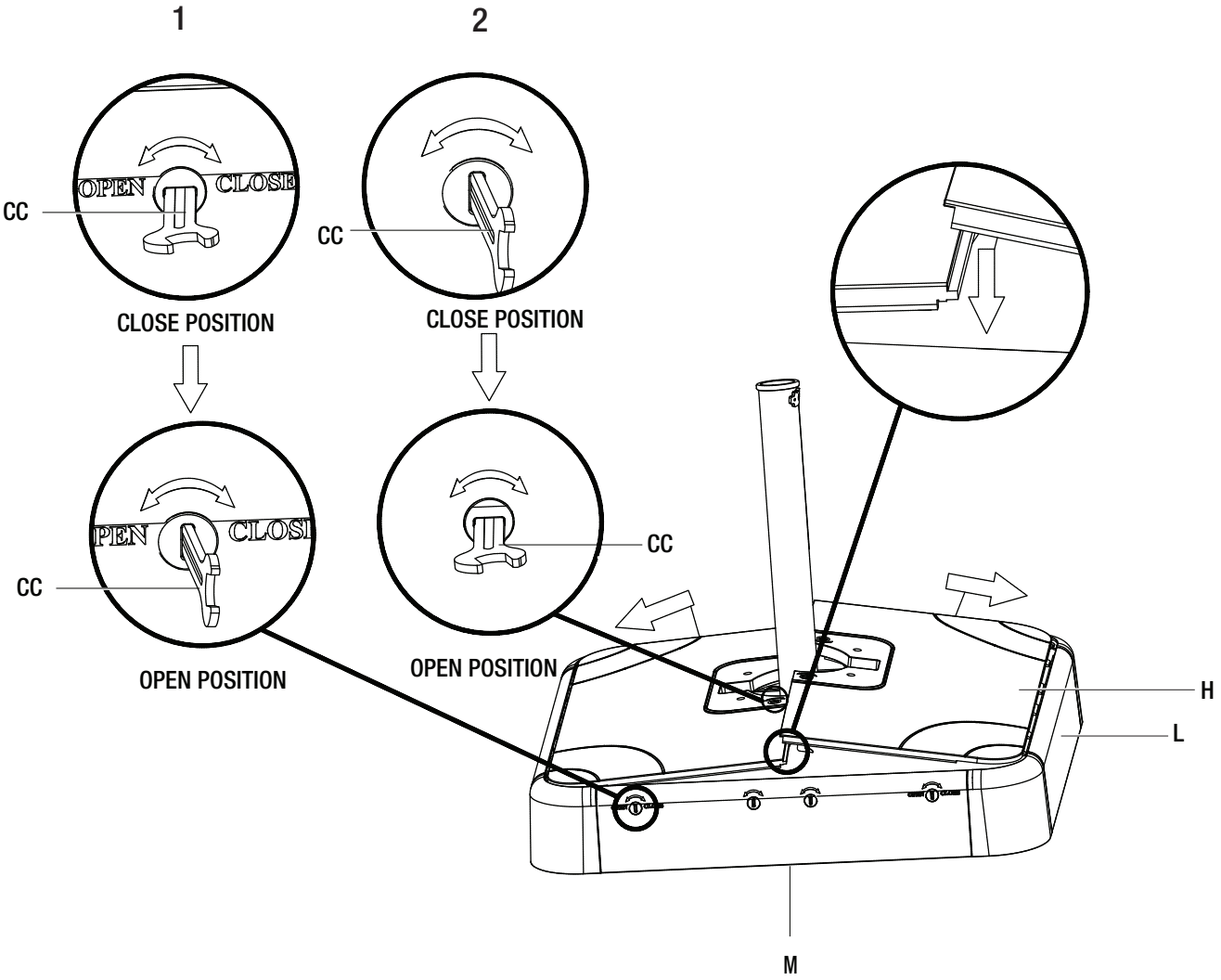

# 9 Locking the lower base cover

- ☐ Lock the lower base cover (H) and the lock panel (M) by turning the locking mechanisms to the CLOSE position using the wrench (CC) as shown in figure 1 and figure 2.
- ☐ Attach the upper base cover (I) to the assembled base.

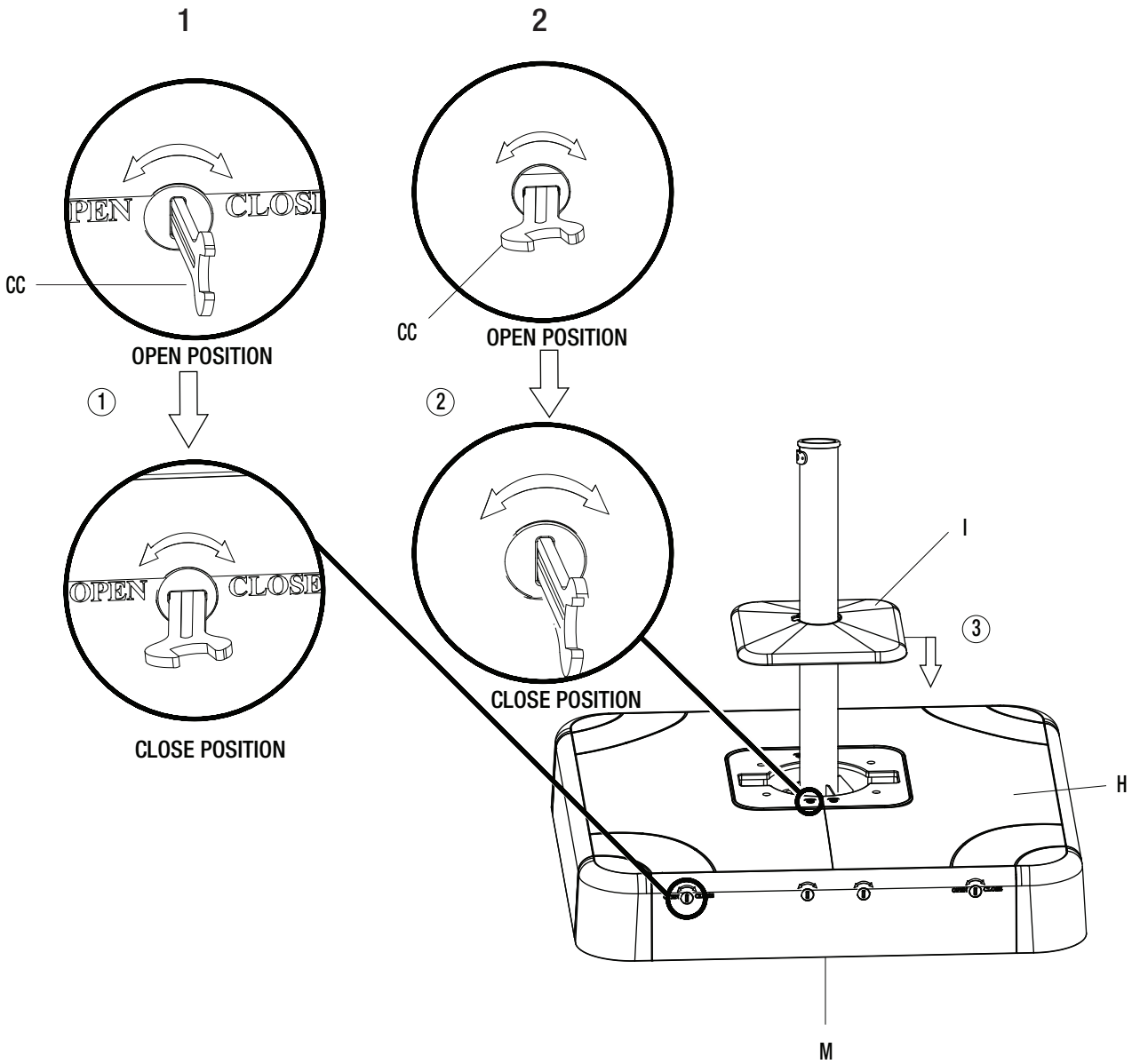

# 10 Attaching the locking knob to the lower umbrella pole

☐ Attach the locking knob (D) to the lower umbrella pole (C) using the M5x8 bolts (BB) and hex wrench (DD). Make sure the locking knob (D) is placed as shown in figure (1) before attaching.

**NOTE:** When inserting the locking knob (D) into the hole, make sure the two points of the locking knob fit into the two slots on the umbrella pole as shown below.

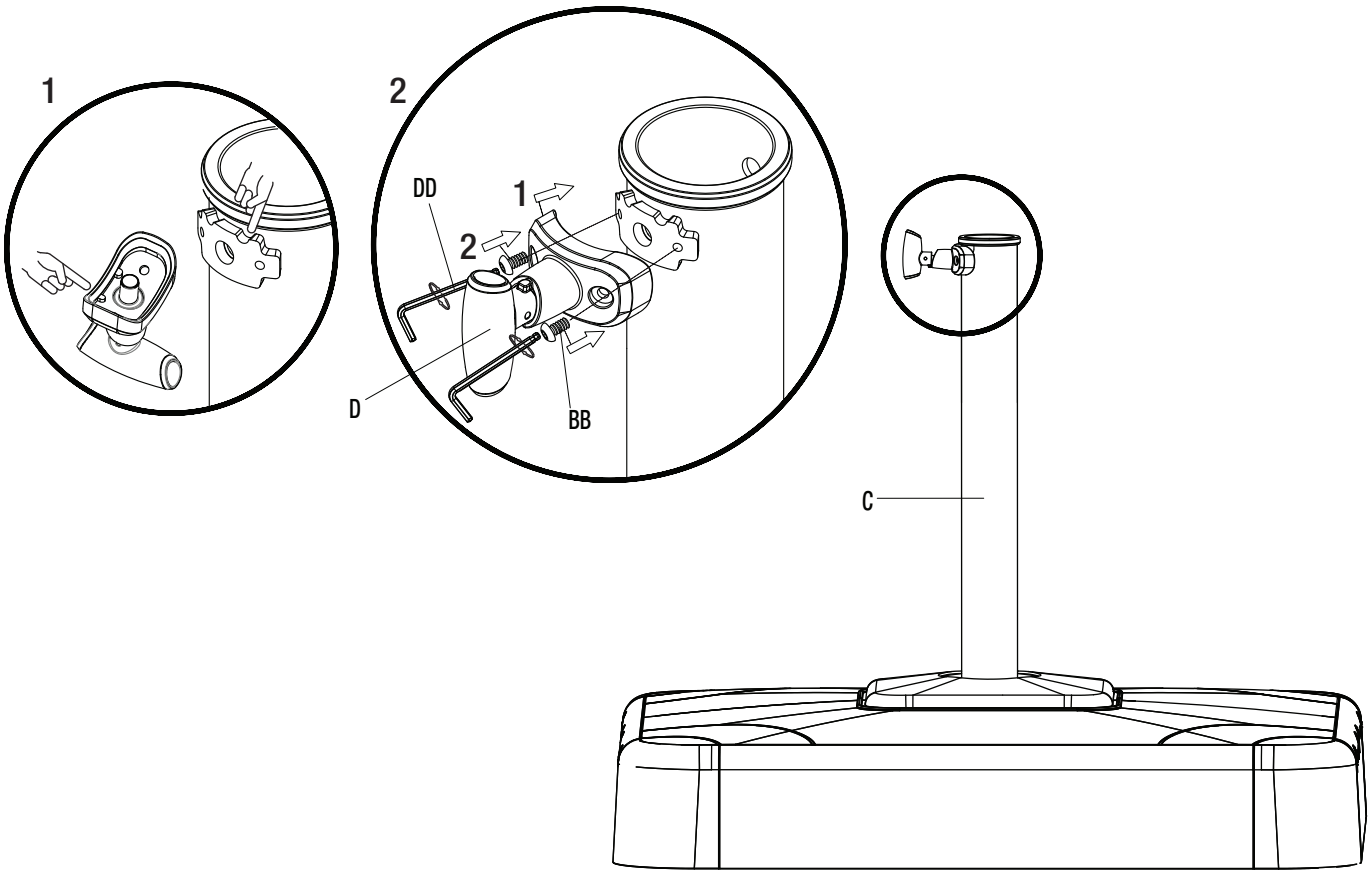

# 11 Preparing the umbrella

☐ Push the long bent tube of the umbrella shade (G) outwards a little while holding down the tap on the short bent tube to make the hinge slide snap into place as shown below.

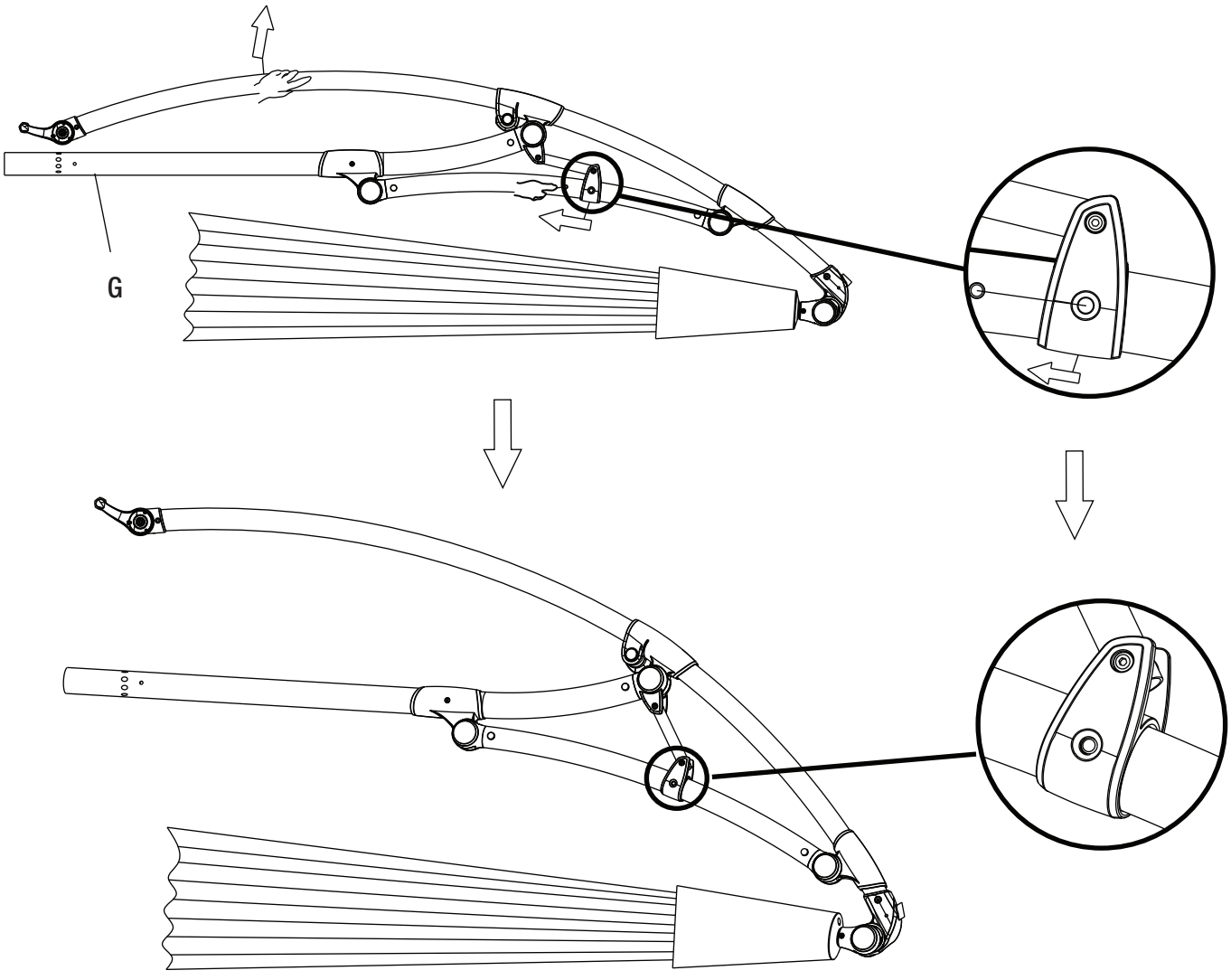

# 12 Attaching the solar reciever

- □ Attach the solar receiver (E) to the umbrella shade (G) by turning the solar receiver (E) clockwise until fully tightened.
- □ Insert the plug into the plug hole of the solar receiver (E).

**NOTE:** Please leave the solar receiver (E) out in a sunny area to charge before the first time turning on the LED lights.

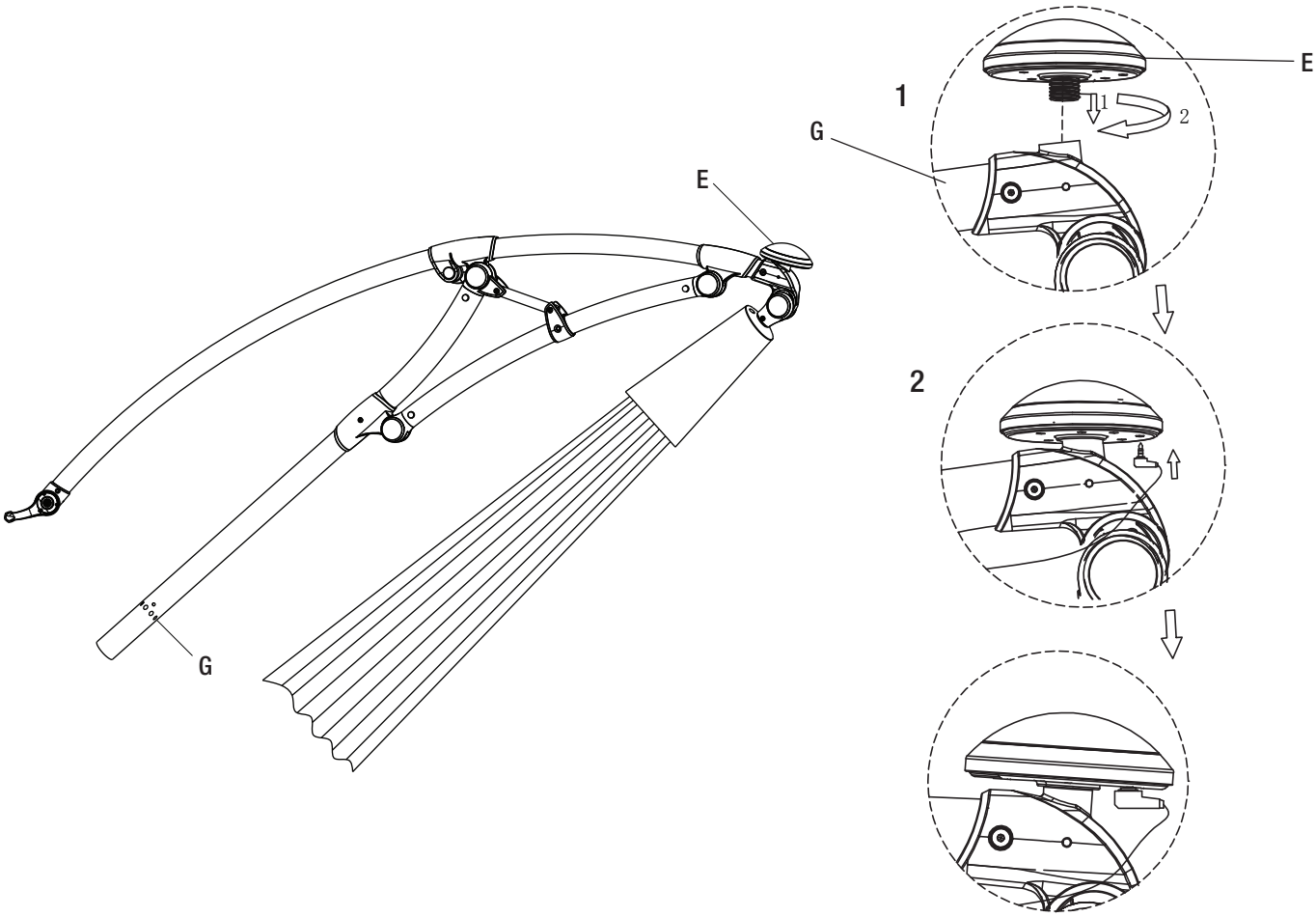

# 13 Inserting the umbrella shade into the lower umbrella pole

- □ Rotate the locking knob (D) 180 degrees clockwise as shown in figure 1.
- □ Insert the umbrella shade (G) into the lower umbrella pole (C) as shown in figure 2.
- □ Rotate the locking knob (D) 180 degrees clockwise as shown in figure 3.

**NOTE:** If there is a gap in the locking knob (D) as shown below in figure 3, please rotate the umbrella shade (G) until it is completely locked as shown in figure 4.

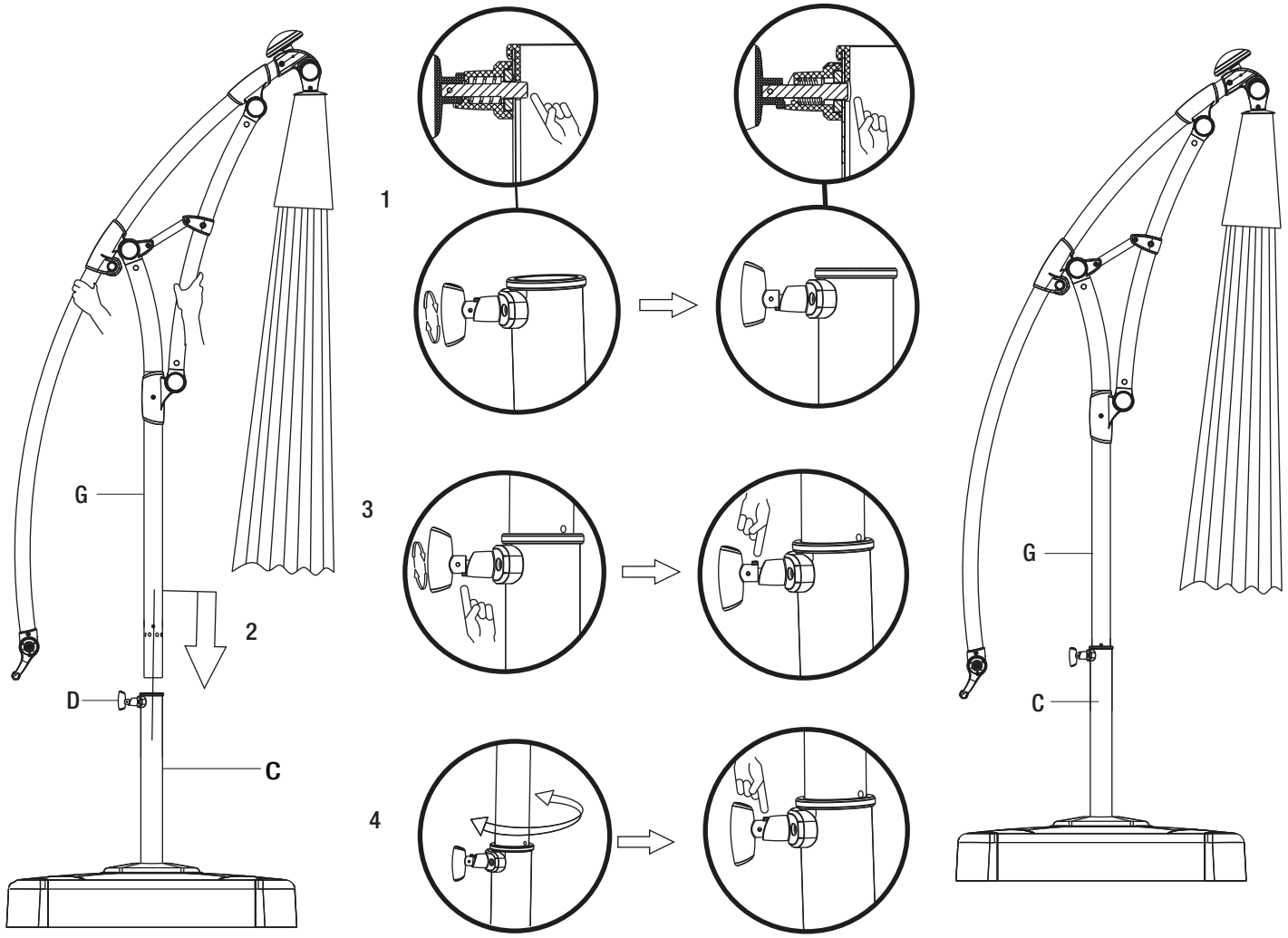

# Operation

## 1 Attaching the crank

- □ Attach the crank (F) to the handle as shown in figure (1).
- □ Attach the crank (F) by aligning the tap with the hole on the crank (F) until it snaps into place.
- □ To detach the crank, the hex wrench (DD) is required to press the tap to take the crank (F) out.
- □ Attach the crank (F) without using the tap as shown in figure (2).
- □ To detach the crank (F), just take the crank out.

**NOTE:** Both methods of attaching the crank (F) are acceptable.

(1)

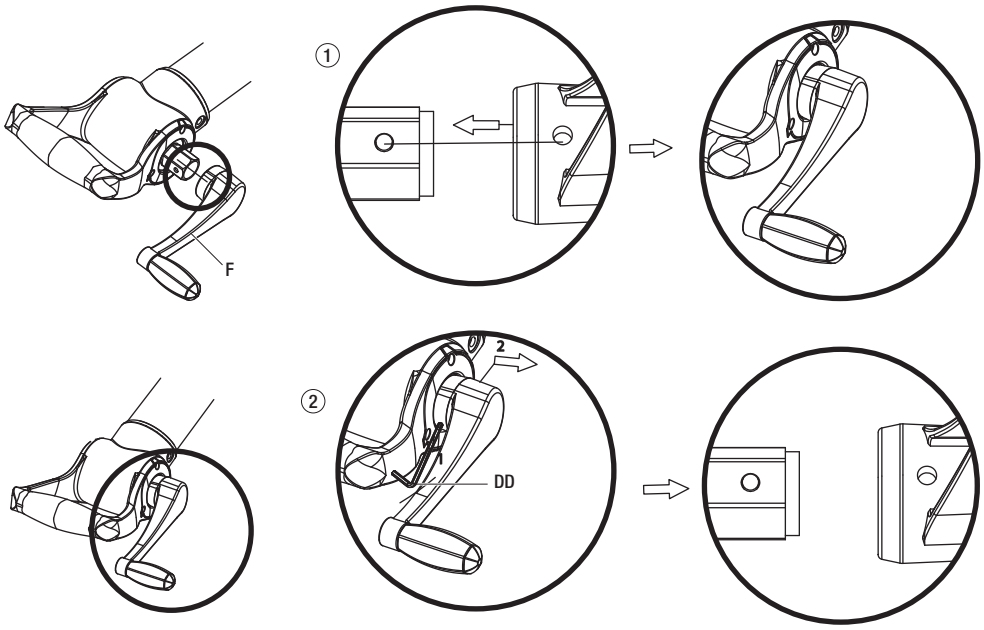


(2)

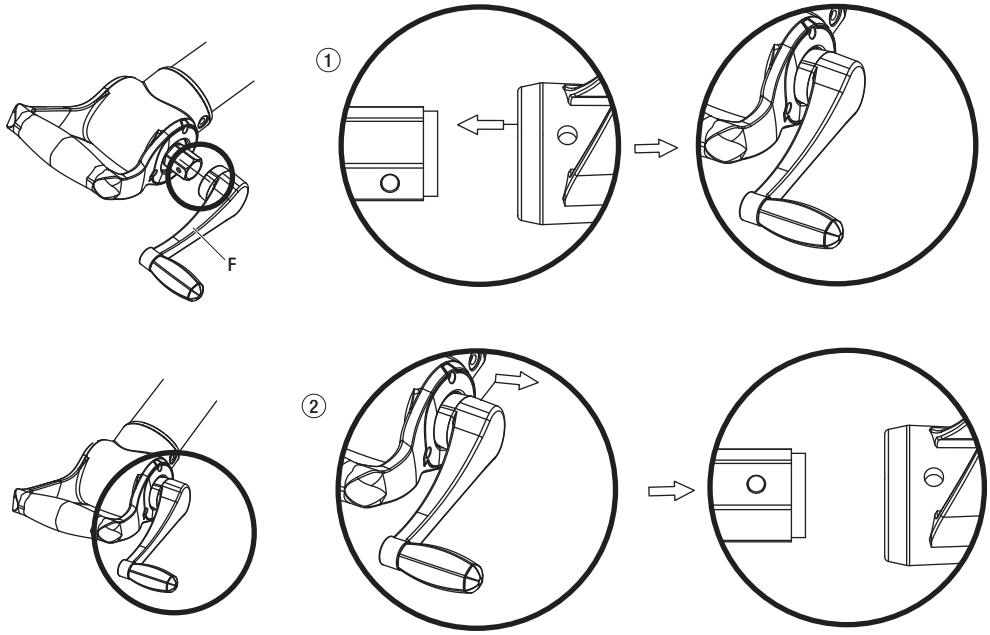

## 2 Raising the umbrella

- ☐ Loosen the knob on the umbrella shade as shown in figure 1 by turning it counterclockwise until it is fully loose.
- ☐ Hold the umbrella handle and push the long bent tube upward as shown in figure 2 until it stops and the umbrella is fully extended.
- ☐ Fully tighten the knob on the umbrella shade clockwise as shown in figure 3 to lock the handle in place.

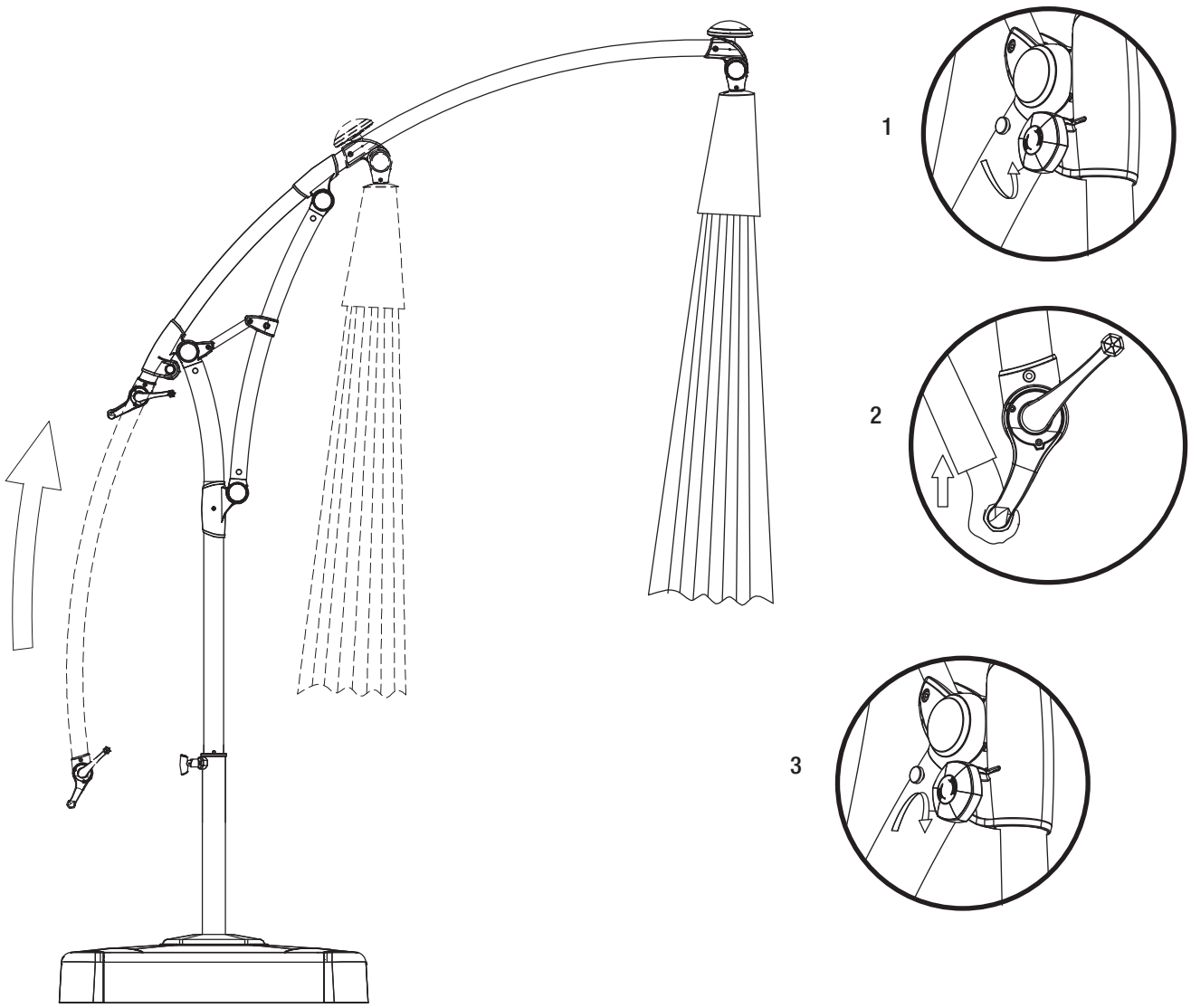

# Operation (continued)

## 3 Opening the umbrella

- ☐ Undo the Velcro belt on the canopy and shake the canopy to separate the umbrella ribs.
- ☐ Slowly turn the crank (F) clockwise to open the umbrella.
- ☐ When the umbrella is fully open, fasten the belt under the hinge of the short bent tube to stabilize the umbrella. Make sure the belt is tightened as shown in figure 3.

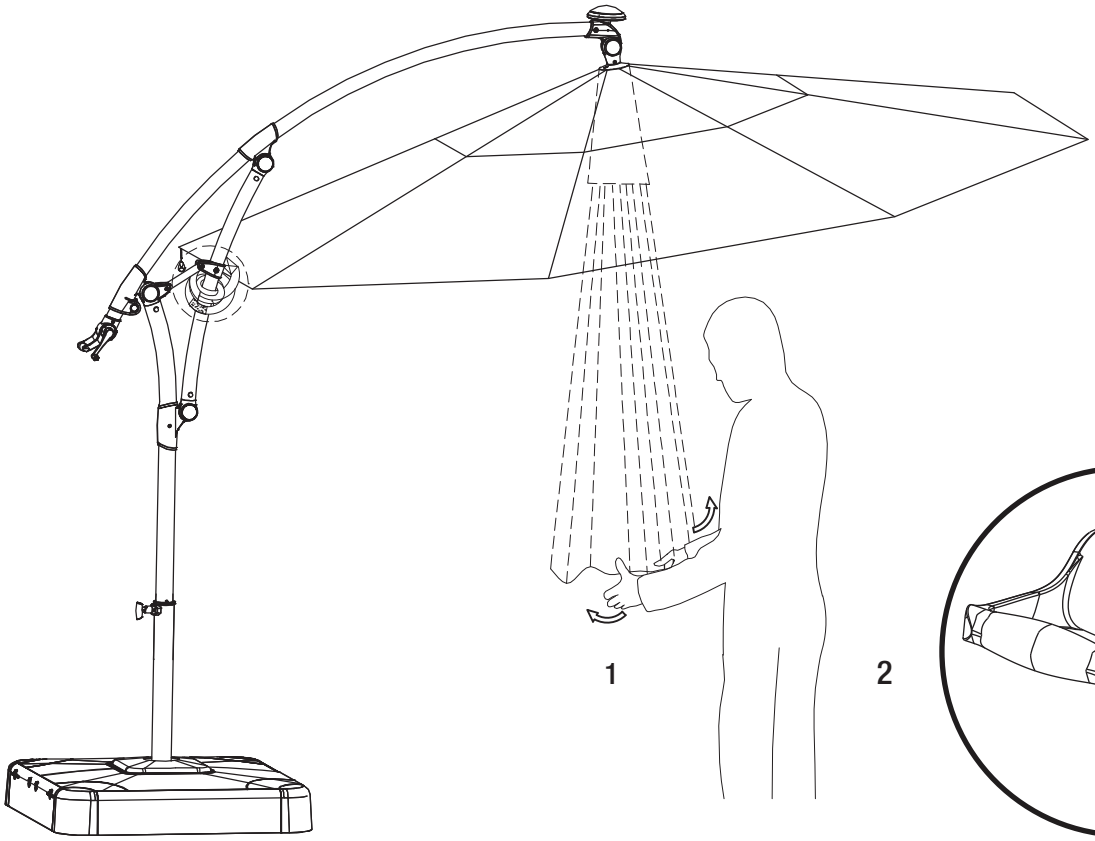


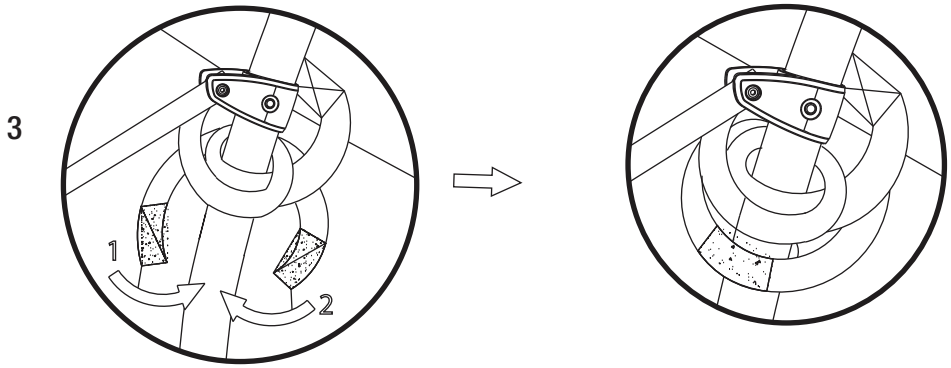

# 4 Operating the umbrella

- ☐ Rotate the locking knob (D) 180 degrees clockwise as shown in figure 1.
- ☐ Hold the umbrella handle with one hand and hold the short bent tube with the other hand to rotate the umbrella as shown in figure 2. (The umbrella can rotate up to 360 degrees.)
- ☐ When the umbrella is at the desired position, rotate the knob 180 degrees clockwise as shown in figure 3.
- ☐ Rotate the umbrella shade (G) until the locking knob (D) automatically secures as shown in figure 4.

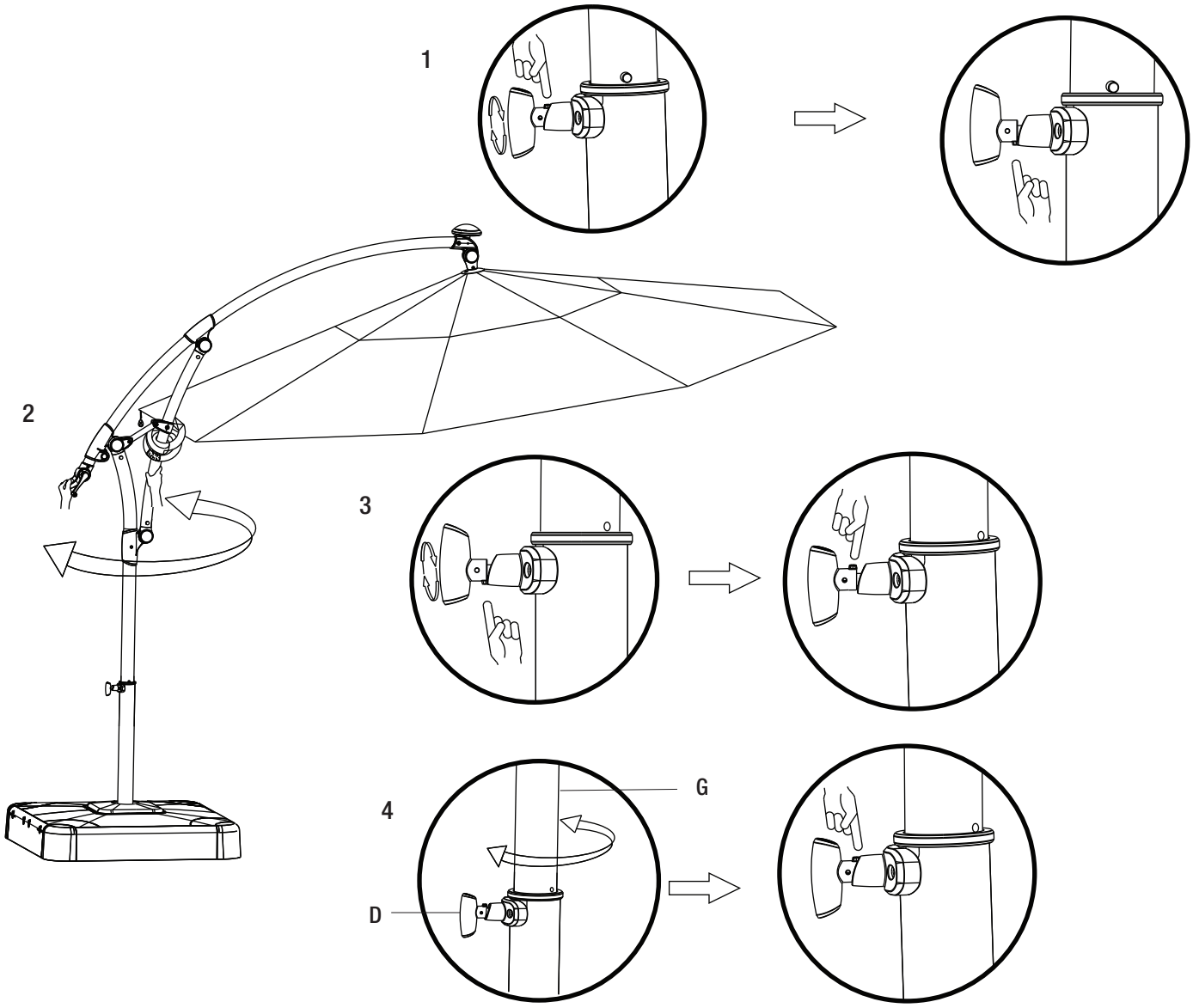

## 5 Operating the umbrella

- □ Press the ON/OFF switch to turn the LED light on and off.
- □ Fully loosen the knob on the umbrella shade (G) by turning it counterclockwise, then slide the umbrella handle down to adjust the angle of the umbrella.
- □ When the umbrella is at the desired angle to shade the sunlight, fully tighten the knob by turning it clockwise.

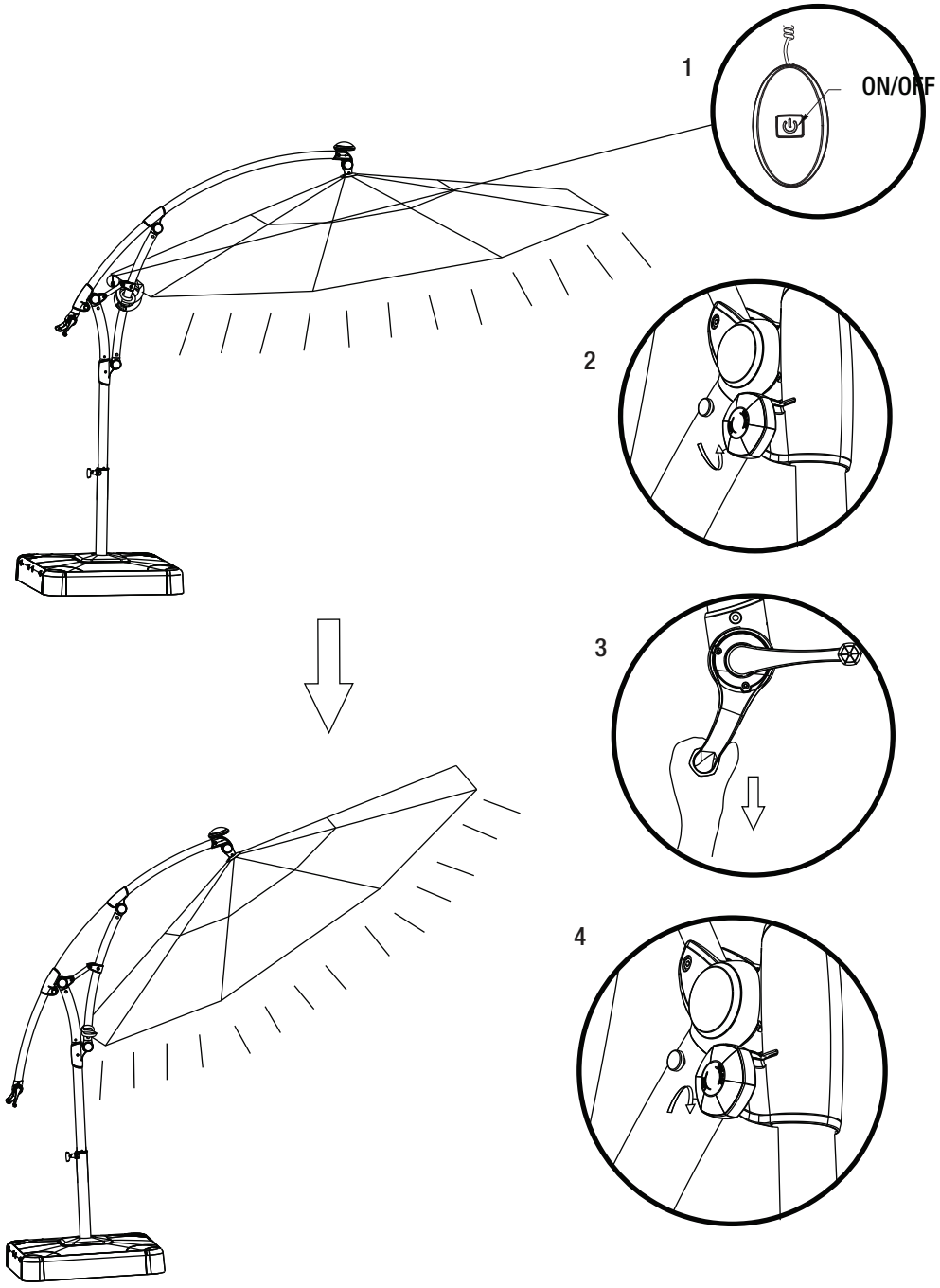

## 6 Closing the umbrella

- ☐ Loosen the velcro belt as shown in figure 1.
- ☐ Turn the crank counterclockwise to close the umbrella as shown in figure 2.
- ☐ When the umbrella is closed, fully loosen the knob on the umbrella shade (G) by turning it counterclockwise as shown in figure 3.
- ☐ Hold the handle and pull the long bent tube downward as shown in figure 4.
- ☐ Tighten the knob on the umbrella shade (G) by turning clockwise as shown in figure 5 after closing the umbrella.

**NOTE:** To adjust the umbrella shade to the original position before closing, follow these steps:
- Fully loosen the knob on the umbrella shade by turning it counterclockwise.
- Slide the handle on the long bent tube upwards.
- When the long bent tube is pushed to the top, fully tighten the knob by turning it clockewise.

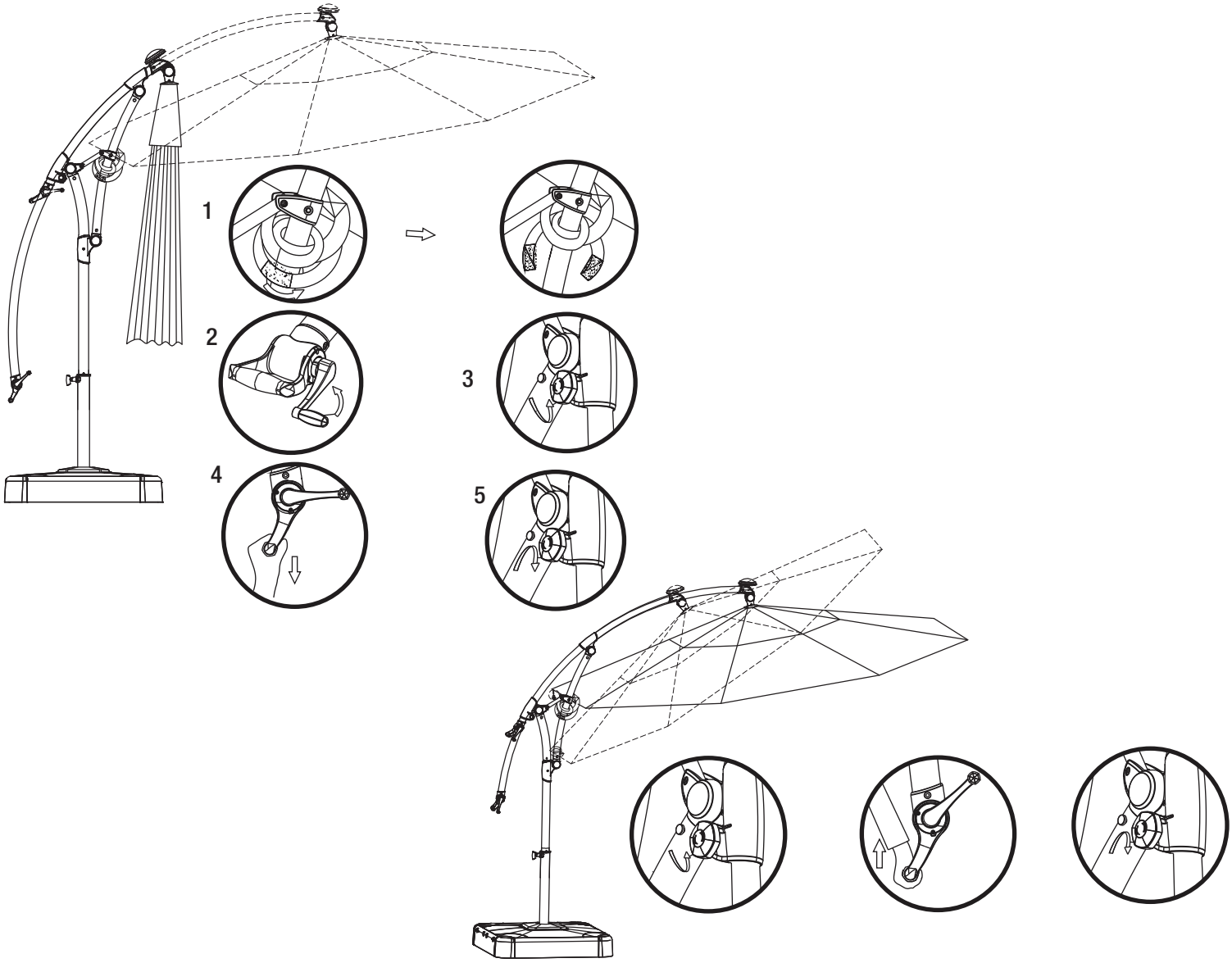

# Operation (continued)

## 7 Storing the umbrella

- □ Tie the umbrella to the umbrella pole with the Velcro belt when not in use as shown below.

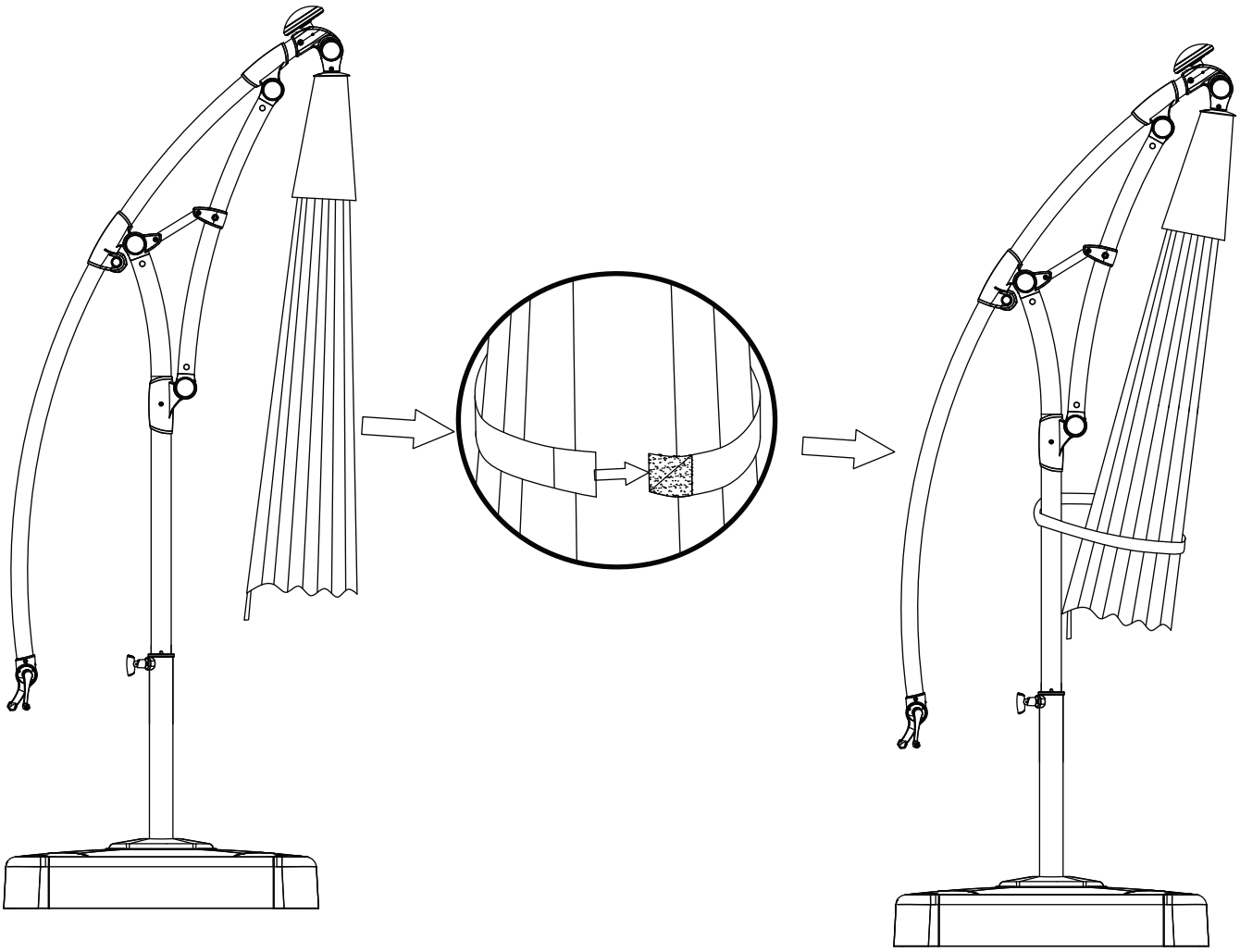

# Care and Cleaning

- □ For best results, clean the frame and fabric with a damp cloth, and dry thoroughly. This will help prevent mildew by removing dirt particles that may accumulate.
- □ Do not clean with abrasive materials, bleach, or solvents.
- □ Store the umbrella in a dry, sheltered place when not in use.
- □ Tie the canopy closed on windy days to prevent damage to the umbrella.
- □ Keep the umbrella away from fire, extreme heat, freezing conditions, and inclement weather such as rain, hail, sleet, snow, or wind.

# Maintenance

## REPLACING THE LED LIGHTS

When the LED light does not work or a LED light cover breaks, replace the LED light or LED light cover with the replacement LED light (O) or replacement LED light cover (P). Gently remove the LED light cover in a counterclockwise direction and pull out the LED light. Insert the replacement LED light (O) and reinstall the replacement LED light cover (P) in a clockwise direction. If the light does not work or illuminate after replacing, try to reverse polarity.

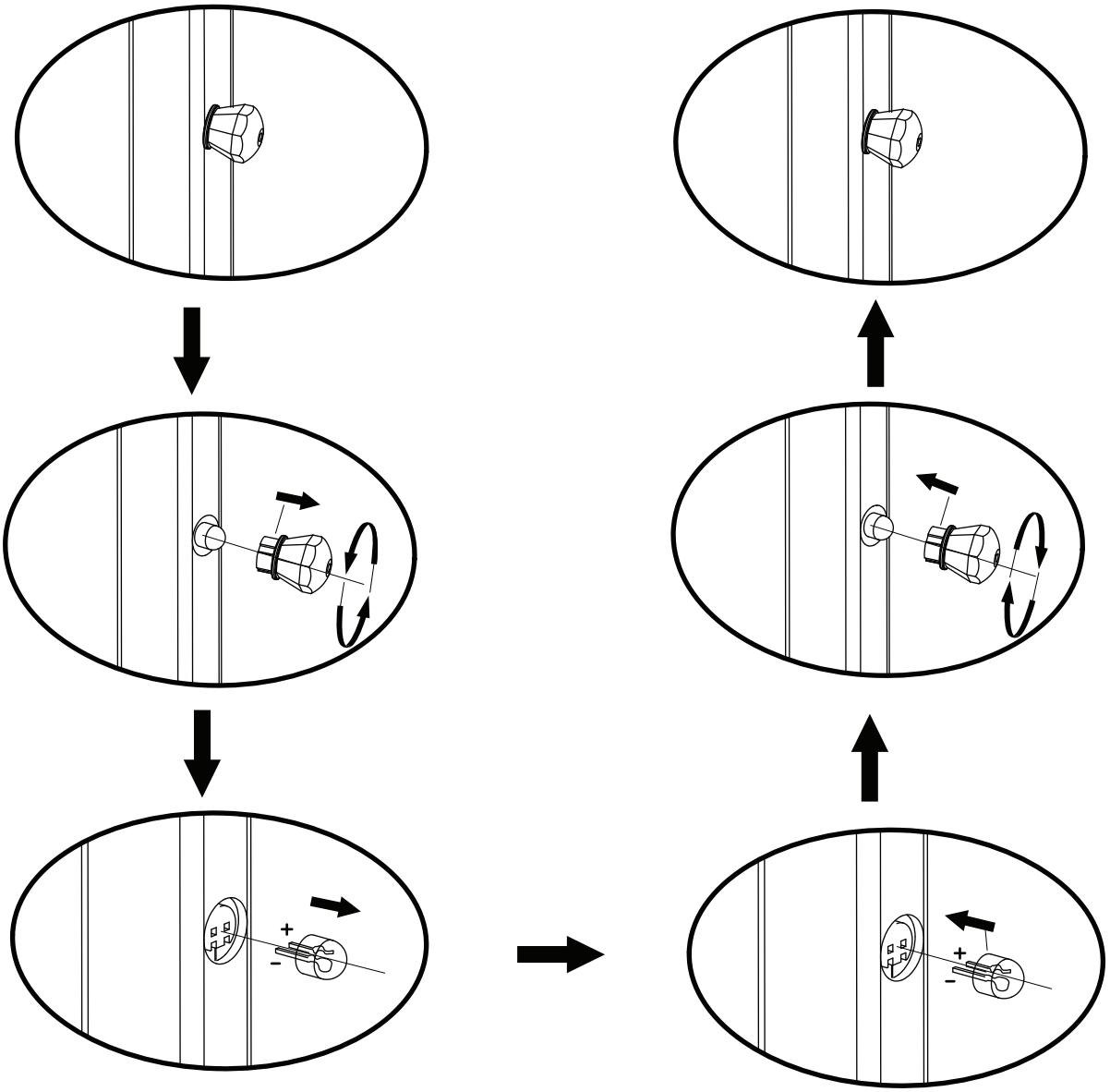

Questions, problems, missing parts? Before returning to the store,
call Hampton Bay Customer Service.

8 a.m. - 7 p.m., EST, Monday - Friday, 9 a.m. - 6 p.m., EST, Saturday

**1-855-HD-HAMPTON**

**HAMPTONBAY.COM**