Vinnova Pavia Vanity Collection 755036-GR-WH-NM

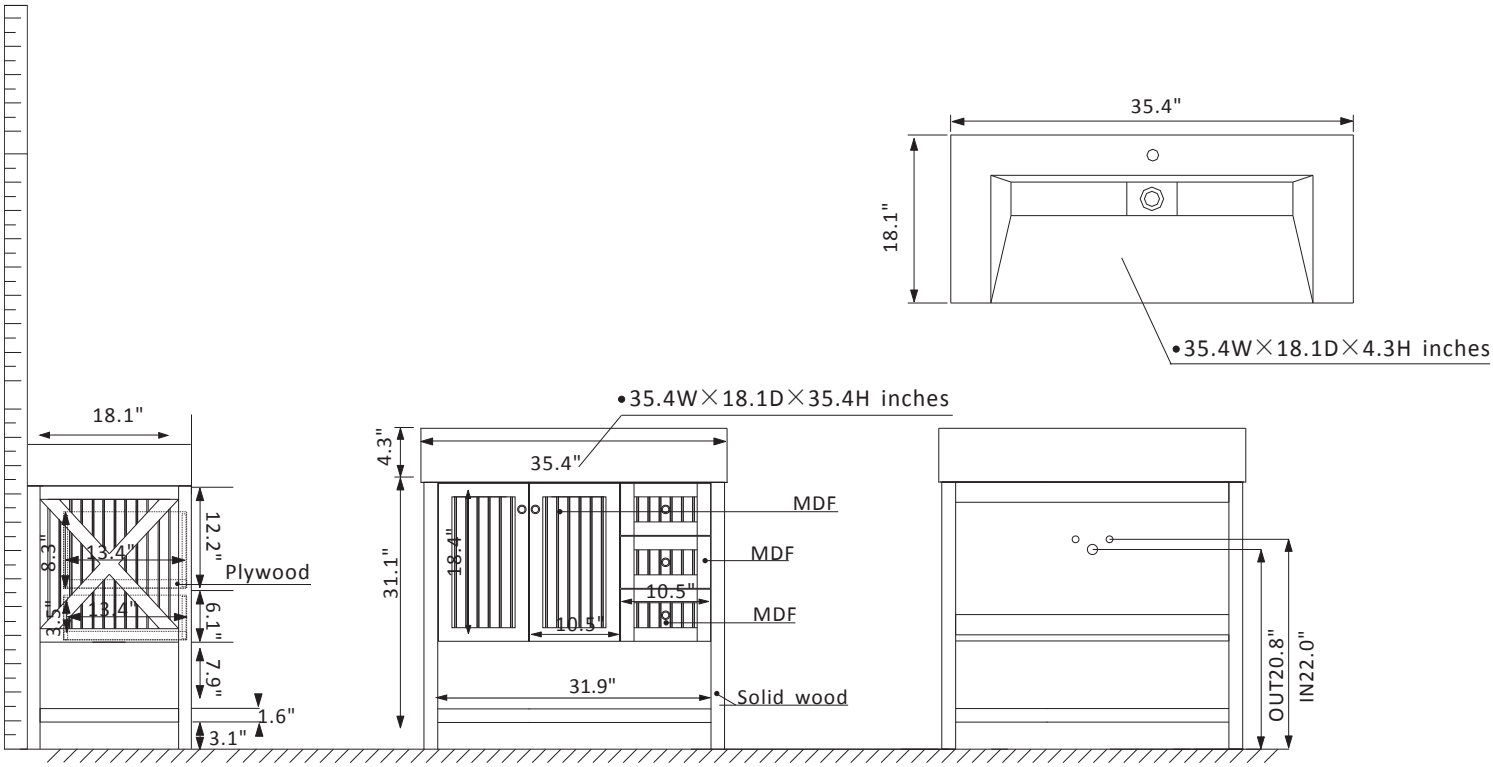

Features

Wood:Solid wood and ply wood construction
Available in White,Grey and Royal Blue Finish
Single Acrylic under-mount sink
1 single hole faucet mount
Door/Drawer : Two Soft-closing doors; Two in one roomy Soft-Closing drawer and 1 Soft-Closing drawer
Elegant satin nickel-finish hardware/Royal Blue: Elegant Brushed Gold finish Hardware
With the open type fixed shelf
Easy plumbing and faucet installation

* Does not include faucet, drain assembly, or P-trap

VINNOVA
FASHION BATHROOM LIFE