61" x 22" Double Bowl Vanity Top

Specifications

Material Content:	Cultured Marble
Back splash:	Integrated
Color:	Solid White / White on White
Faucet Holes:	6 holes, 4" center mount
Accessory:	Side Splash sold separately

Dimensions

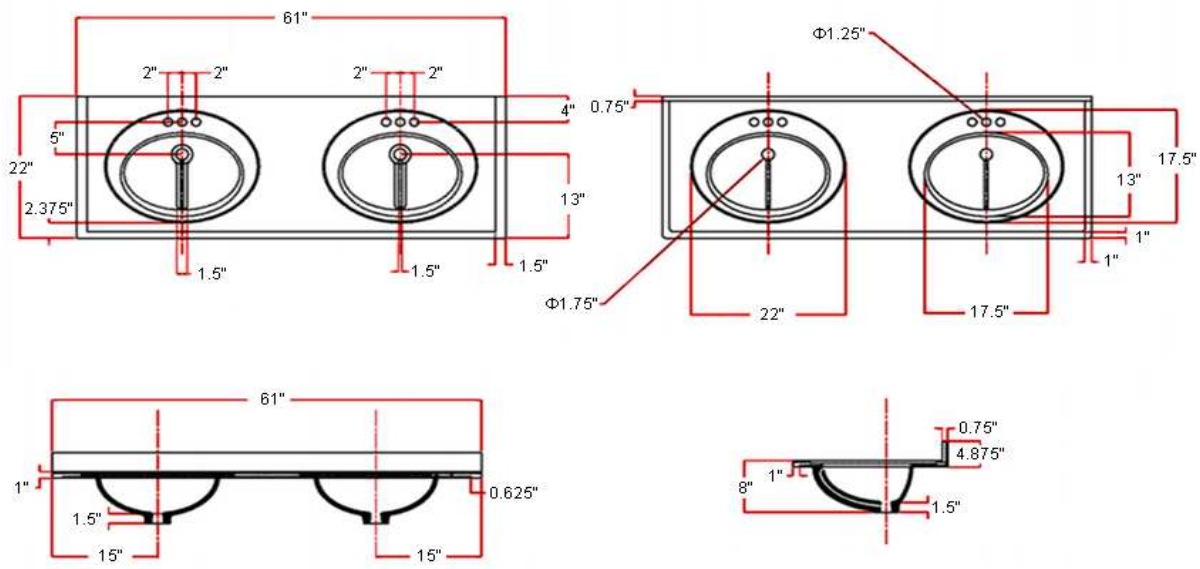

Warranty & Compliances

Warranty	5 Year Limited Warranty
cUPC	Complaint
CSA	Complaint
ANSI	ANSI Z124.3 complaint

Order Codes & Finishes/Colors

	View Box
Solid White	553313
White on white	553347

Type:
Job:
Order Code:
Approvals:

Design House reserves the right to make changes in materials, specifications & models at any time. Design House also reserves the right to discontinue product without notice or obligation.

Design House is a registered brand of DHI Corp.
Mequon, WI * 800-558-8700