24" Dual Towel Bar

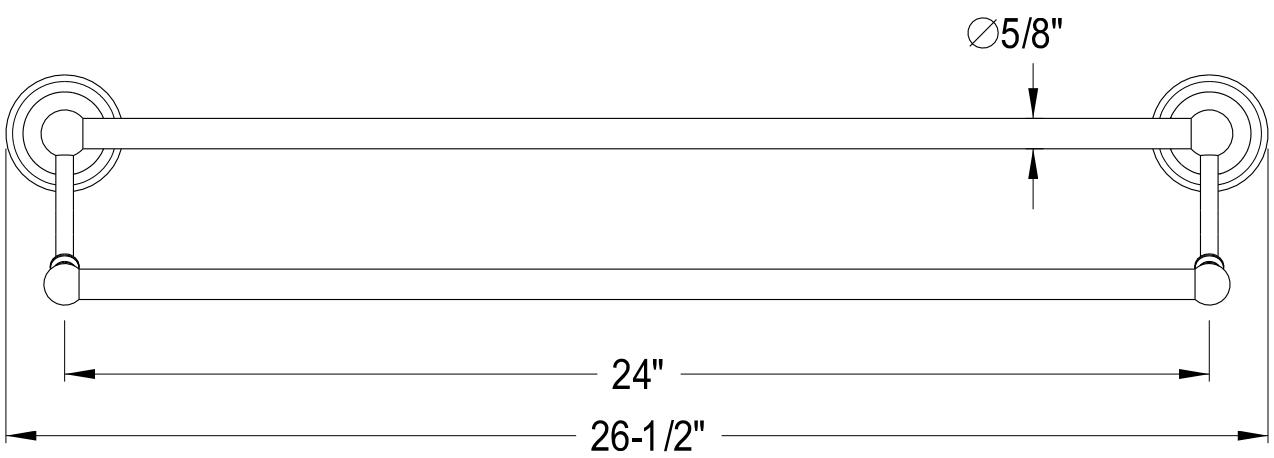

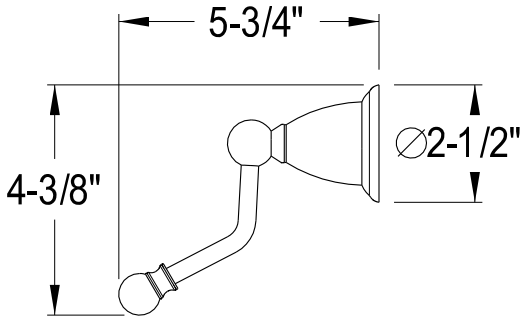

2011-11-A

Towel Ring

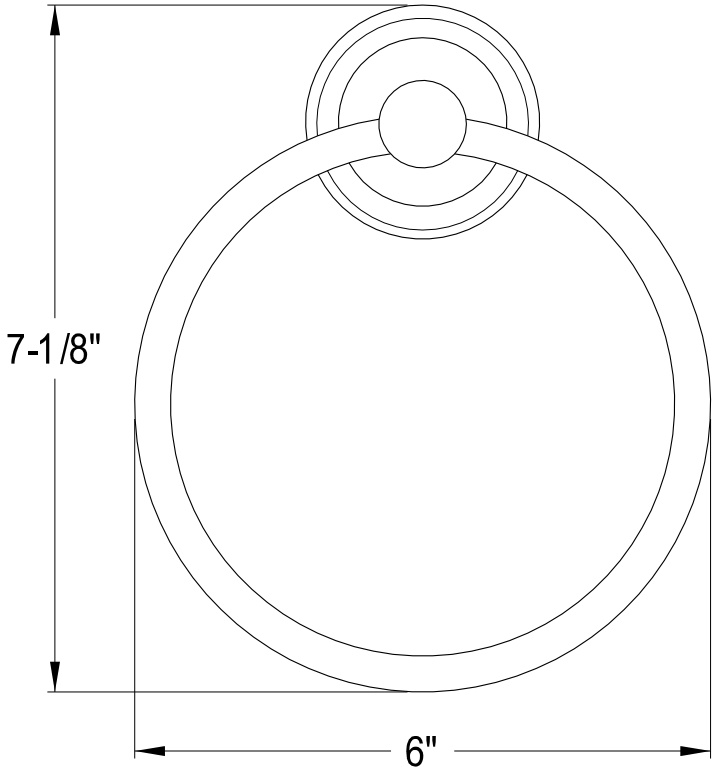

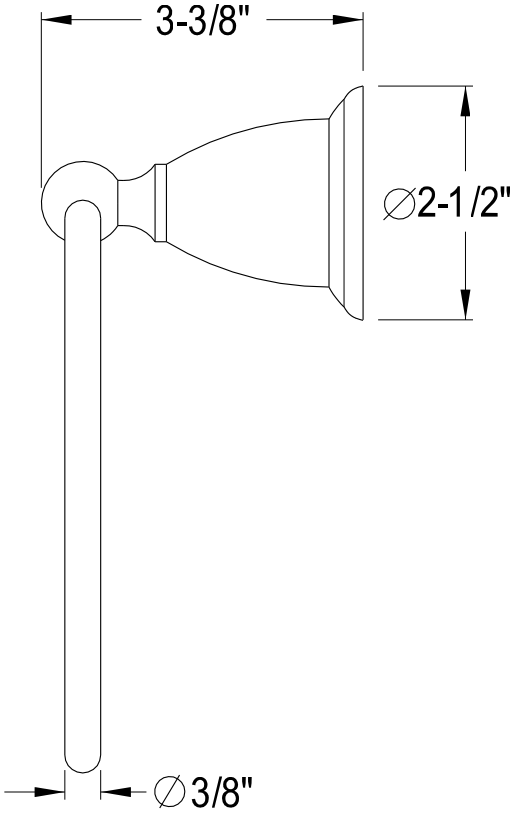

2017-06-A

Toilet Paper Holder

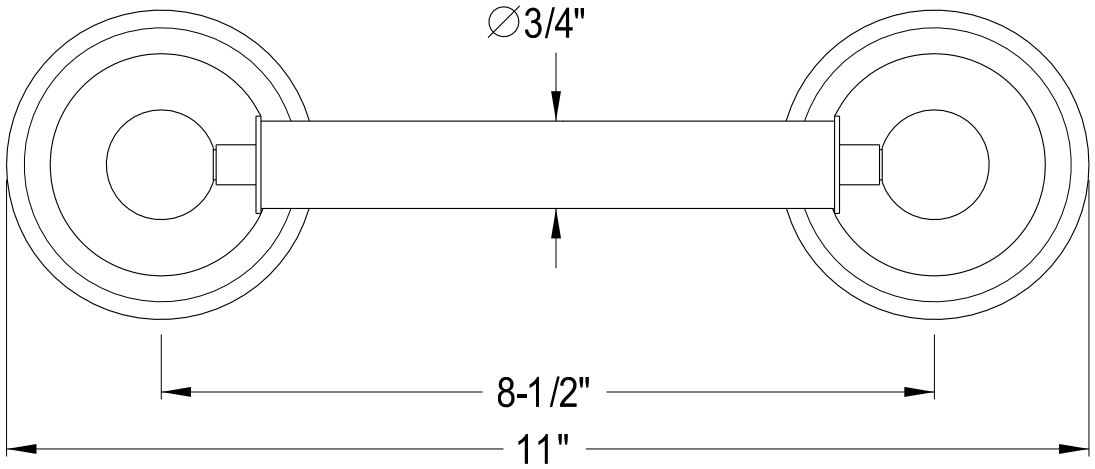

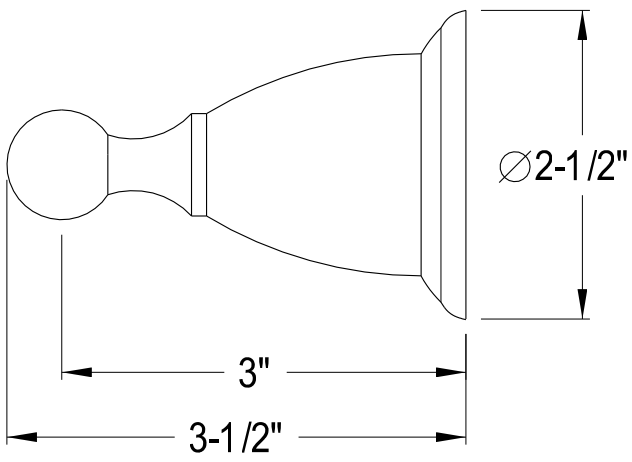

2011-11-A