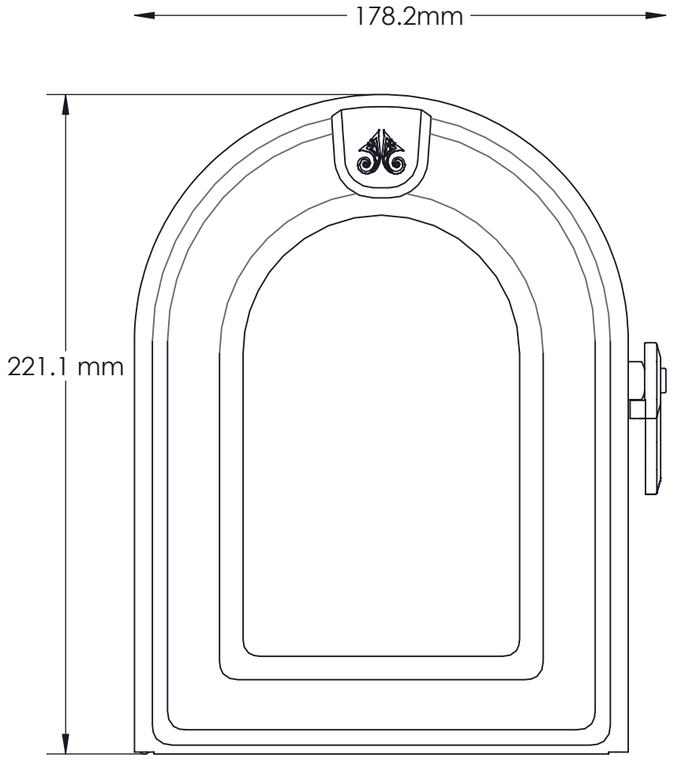
178.2mm
221.1 mm

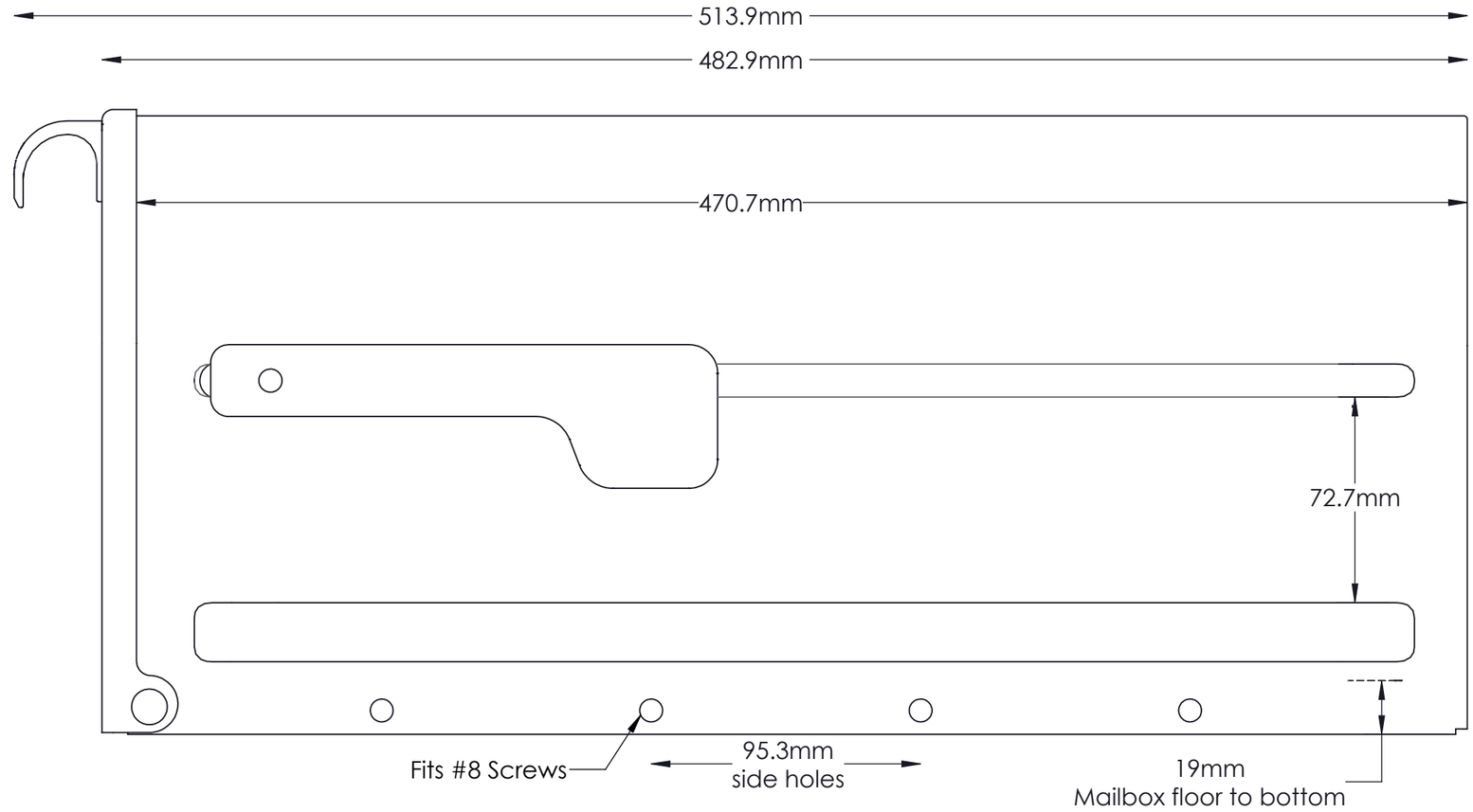
513.9mm
482.9mm
470.7mm
72.7mm
Fits #8 Screws
95.3mm
side holes
19mm
Mailbox floor to bottom

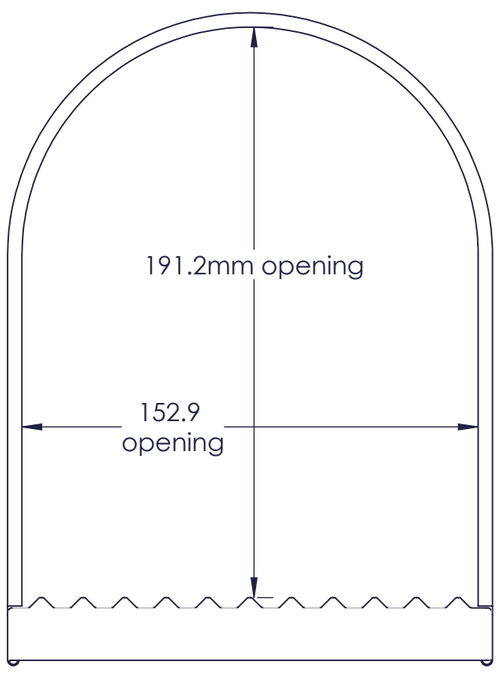
191.2mm opening
152.9
opening

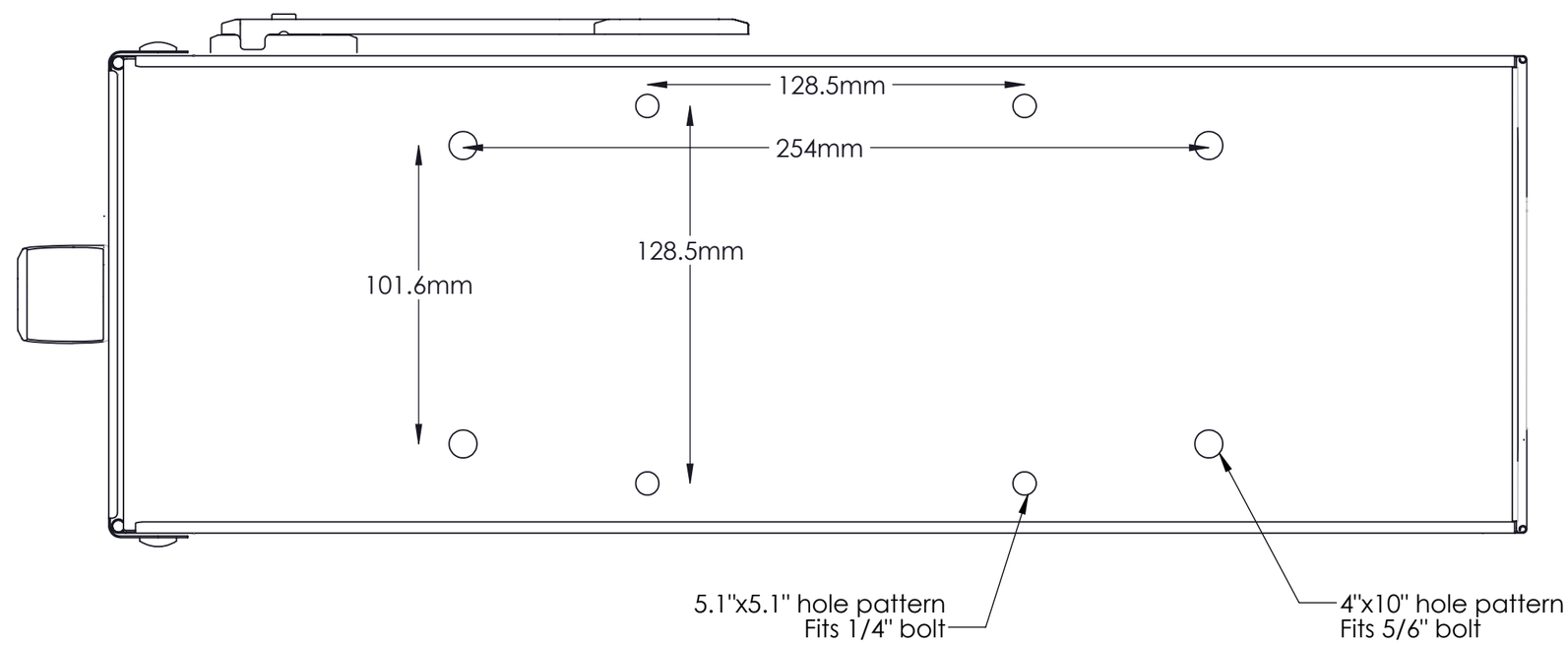
128.5mm
254mm
128.5mm
101.6mm
5.1"x5.1" hole pattern
Fits 1/4" bolt
4"x10" hole pattern
Fits 5/6" bolt