165 DEGREE SOFT CLOSE FRAMELESS HINGE

Adjusting the door

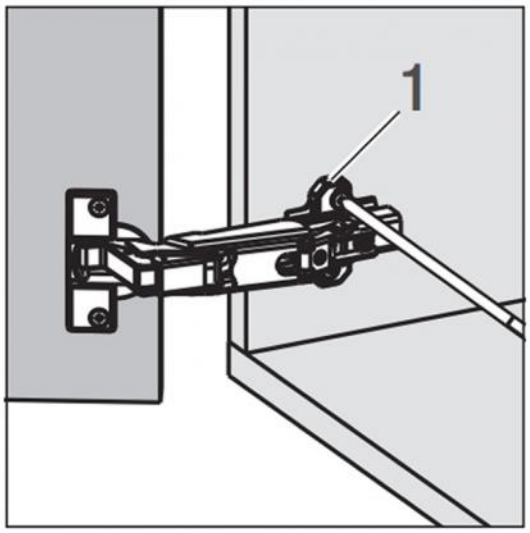

Height Adjustment

Loosen the top mounting screw (1) to adjust the door up or down.

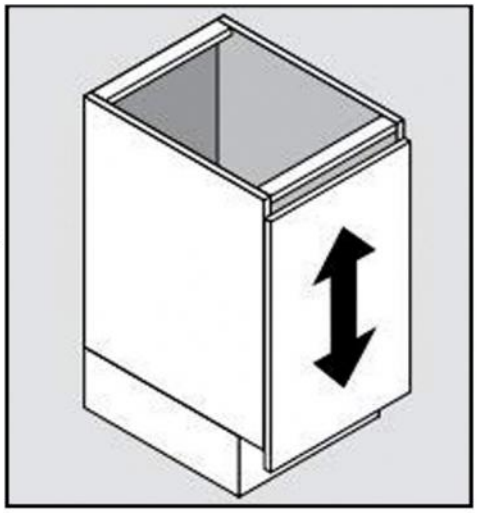

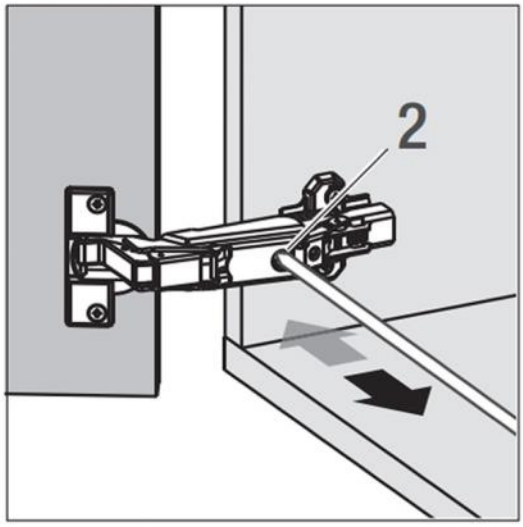

Overlay Adjustment

Turn the adjustment screw (2) to adjust the door overlay.

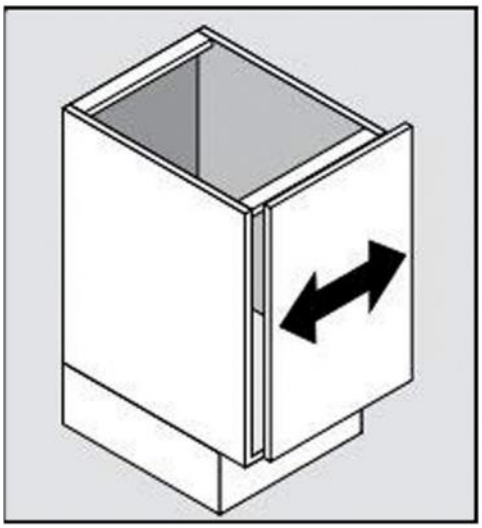

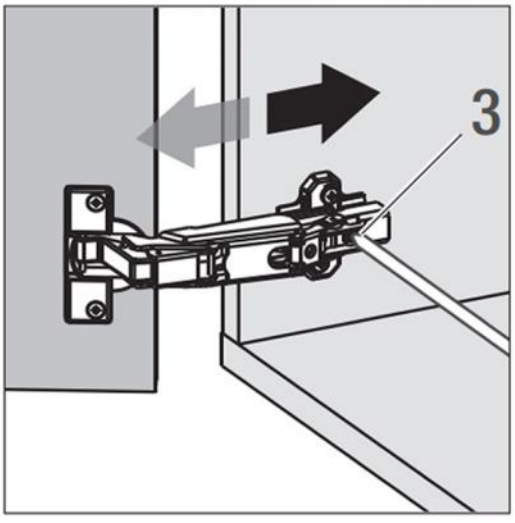

Depth Adjustment
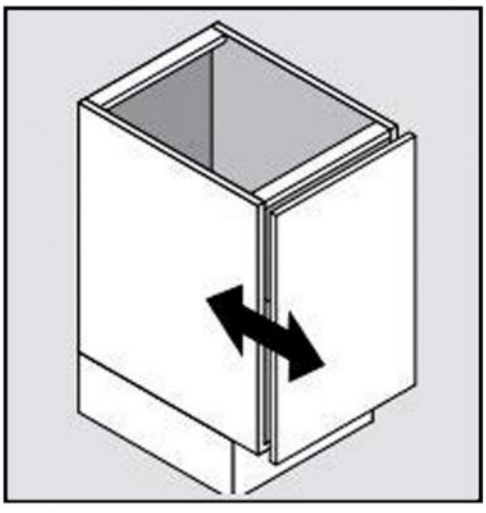
Turn the eccentric screw (3) to adjust the distance of the doors from the cabinet.