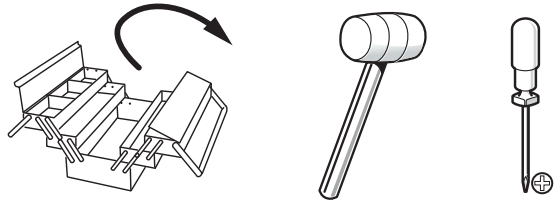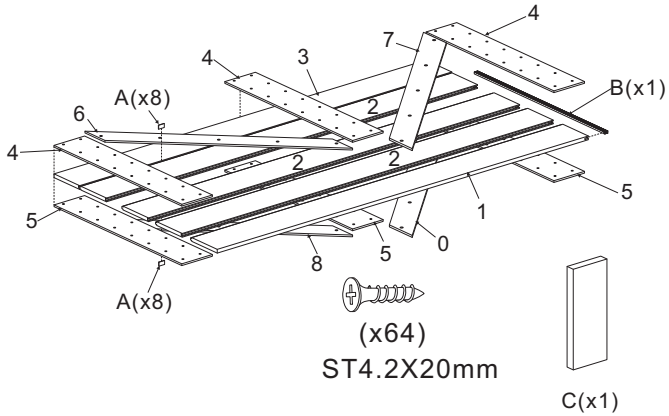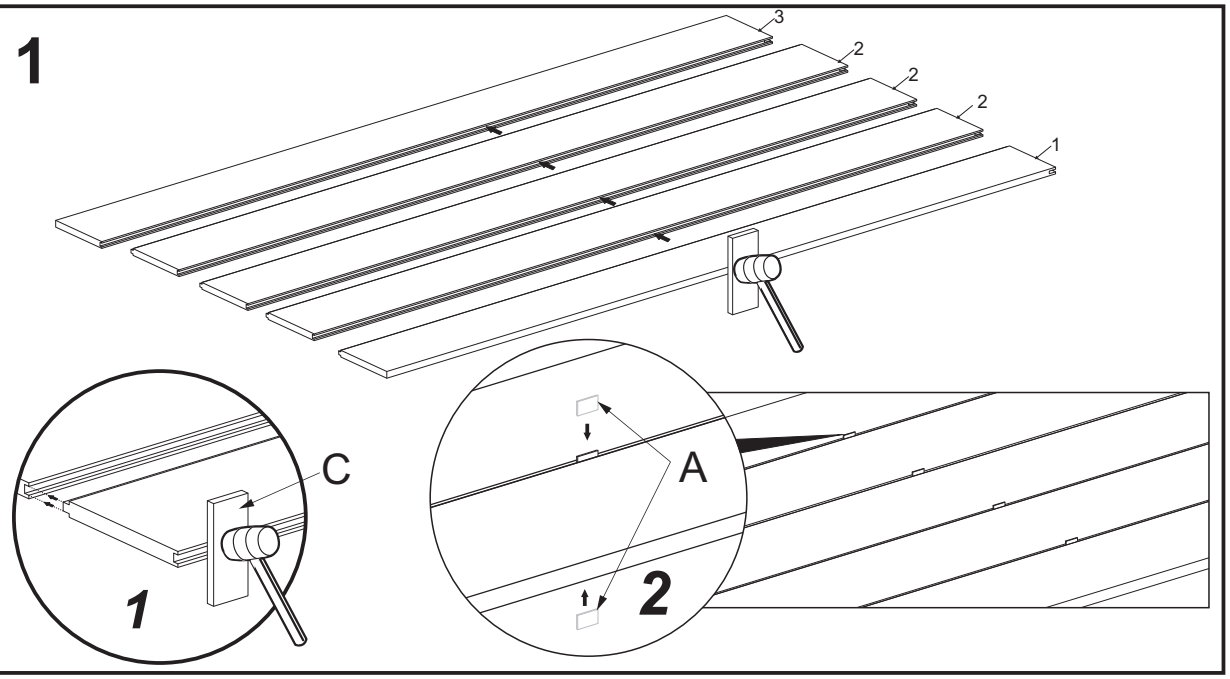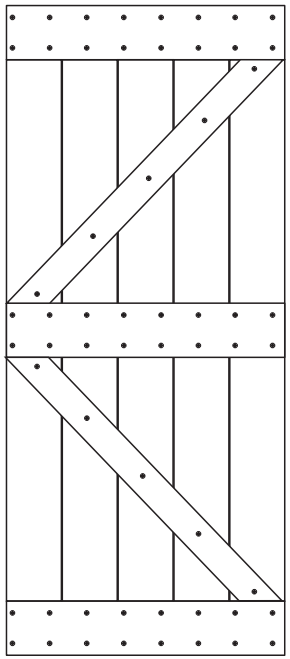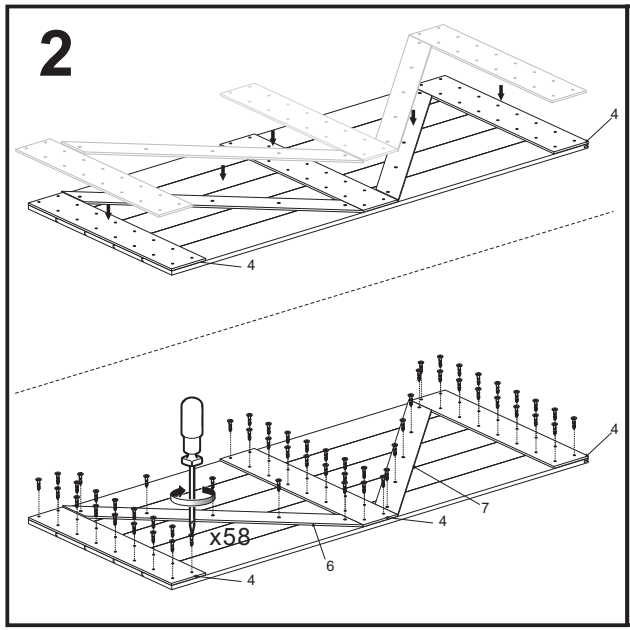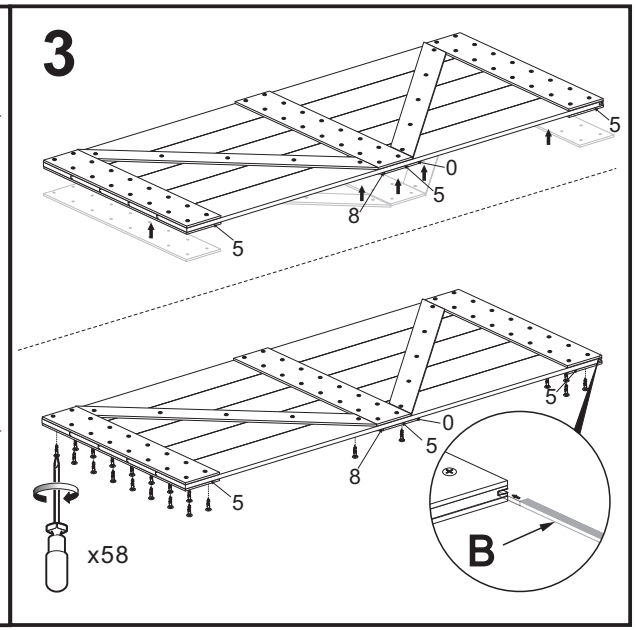Installation Manual