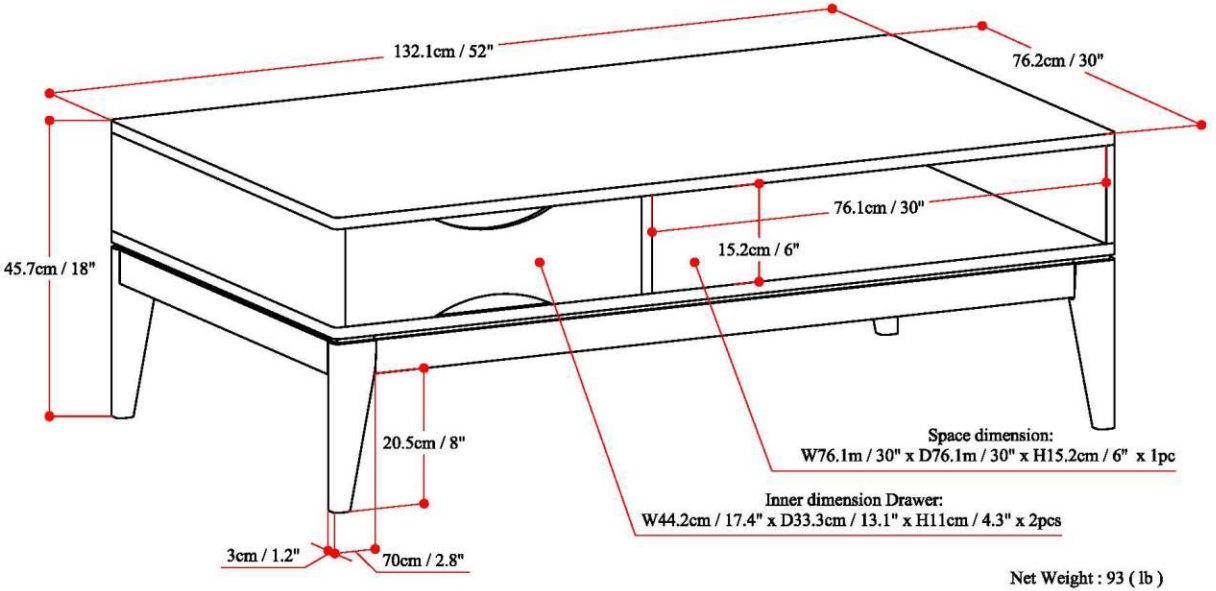

Net Weight : 93 (lb)