Vinnova Modena Vanity Collection 756028-GR-BG-NM

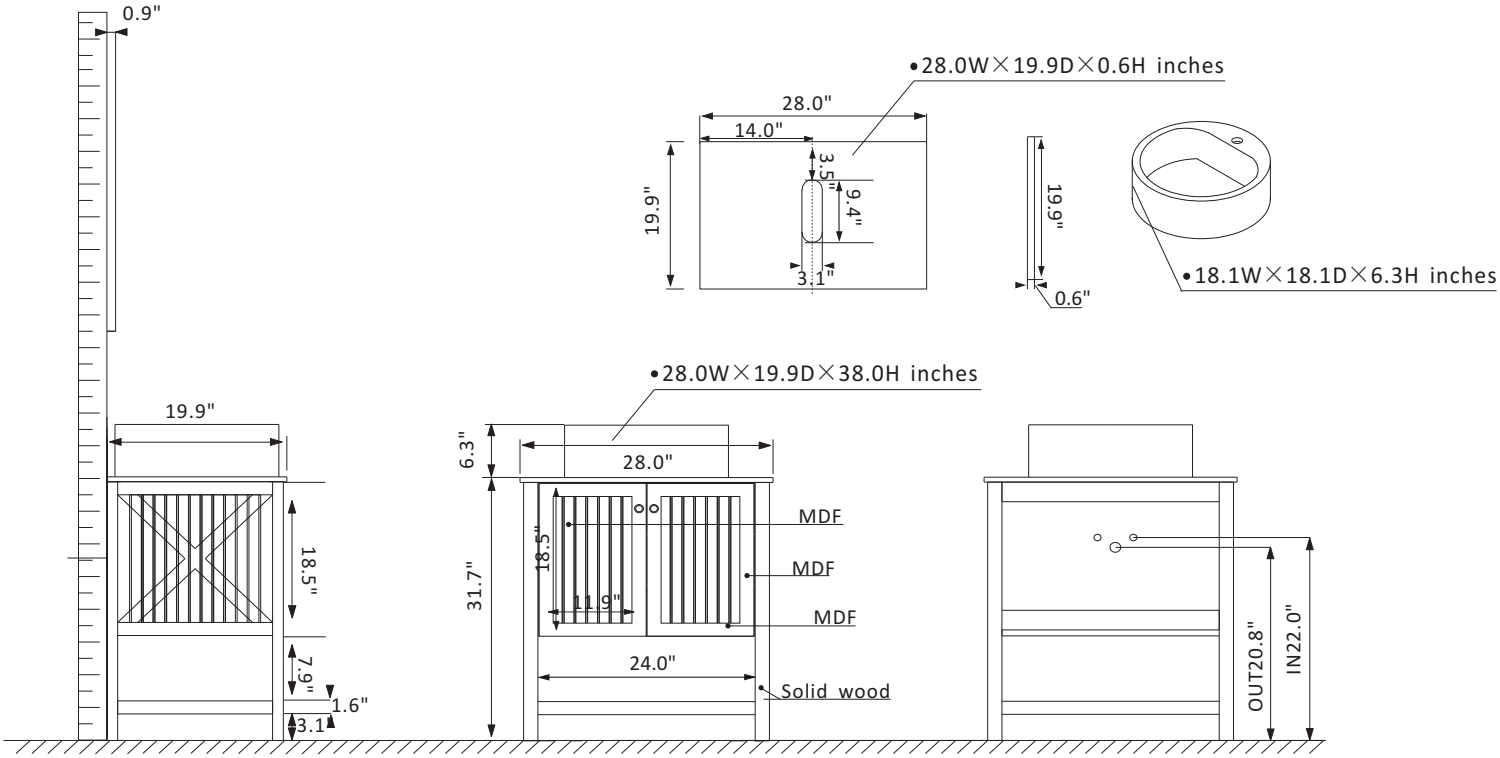

Features

Sturdy solid-oak/wood veneer constructon
Available in White and Grey finish
Available with Dark Black glass top
Single raised, round sink
1-hole faucet mount
Two Sof-closing doors
Striking satn nickel-finish hardware
Easy plumbing and faucet installaton*

* Does not include faucet, drain assembly, or P-trap

VINNOVA
FASHION BATHROOM LIFE