Vinnova Modena Vanity Collection 956028-GR-BG

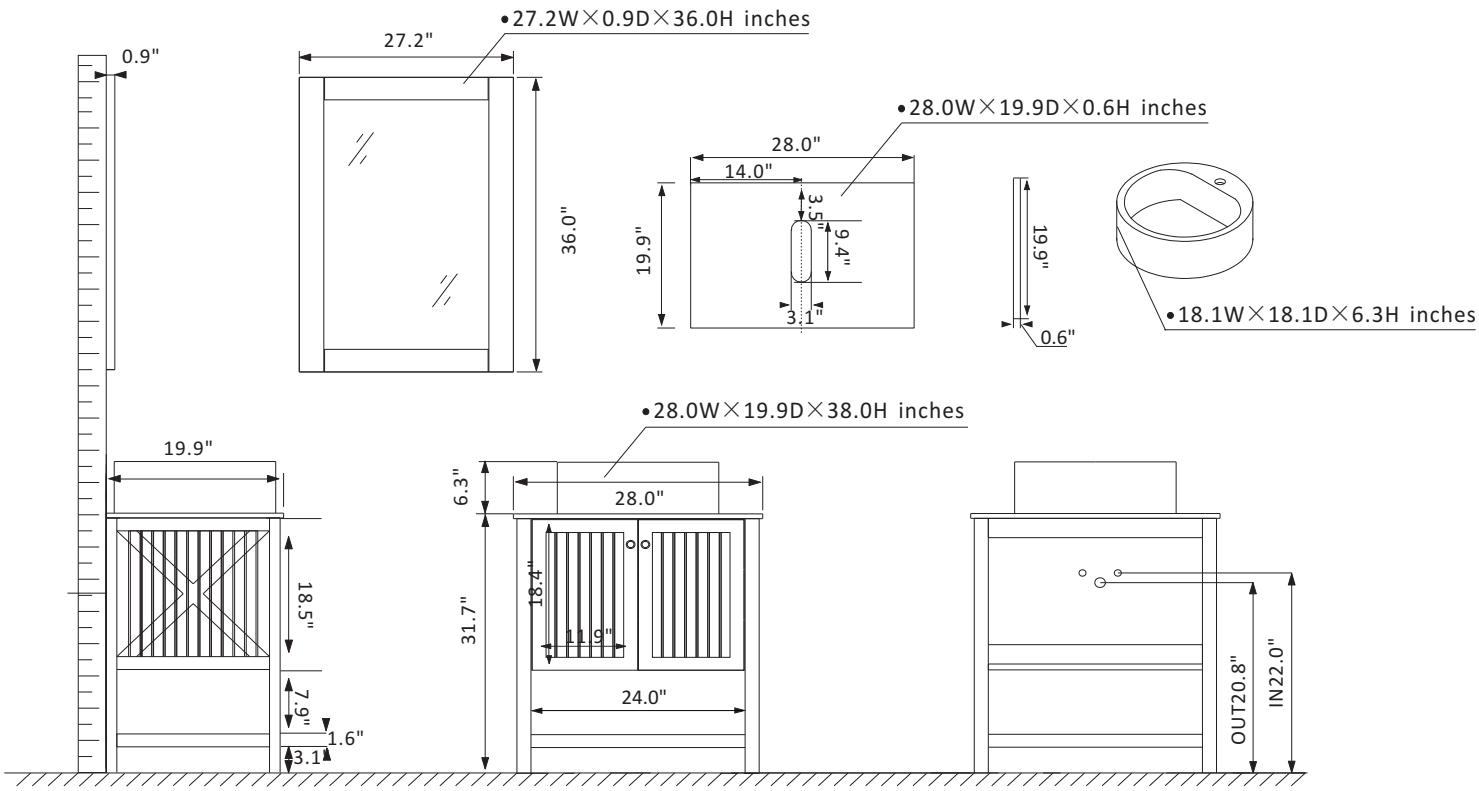

Features

Crafted of PVC board which Waterproof, moisture-proof and ash layer
Available in White and Grey Finish
Available with Dark Black glass top
Single raised, round sink
1-hole faucet mount
Single Coordinating framed mirror
Two Soft-closing doors
Striking satin nickel-finish hardware
Easy plumbing and faucet installation*

* Does not include faucet, drain assembly, or P-trap

VINNOVA
FASHION BATHROOM LIFE