SWG SIDEWALL POWER VENTING KIT

Installation Specifications For The Following Furnaces

Certified As A Component Part of The Furnace Application.

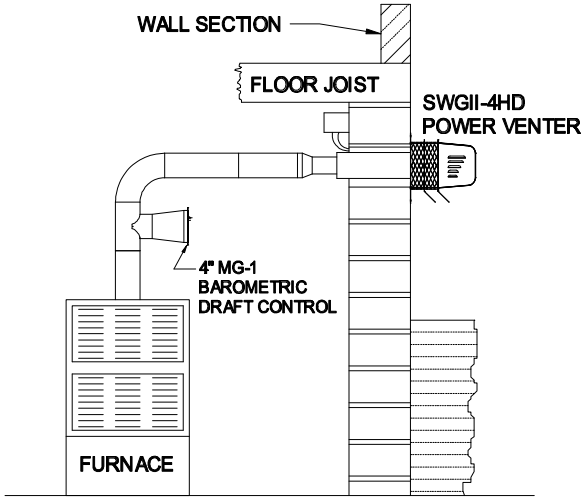

This instruction sheet contains OEM specific information that supercedes the provided instruction manual where applicable. All field wiring shown in included wiring diagrams are correct regardless whether the CK-43 or CK-43F is used.

Contents

Kit P/N	Furnace Manufacturer	Page
46205411	Amana Refrigeration Inc.	2
46205405	American Standard Inc. & The Trane Co.	4
46205407	Armstrong Air Conditioning Inc.	6
46205410	Bard Manufacturing Co.	7
46205403	Carrier Corp.	8
46205408	Consolidated Industries Corp.	10
46205406	Dunkirk Radiator Corp.	11
	Evcon Industries Inc.	13
46205401	International Comfort Products (Adjustable)	14
46205413	International Comfort Products (Fixed)	16
46205402	Lennox International Inc.	17
46205409	Rheem Air Conditioning	18
46205404	York International Corp.	19

DO NOT DESTROY

THESE INSTRUCTIONS MUST REMAIN WITH EQUIPMENT

Field Controls, L.L.C., 2630 Airport Road, Kinston, NC 28504
Technical Support (800) 742-8368

SWG-4AM AMANA SIDEWALL POWER VENTING KIT
Field Controls P/N 46205411

Kit Includes:

SWGII-4HD Sidewall Power Venter
CK-43 Control Kit
Includes: 4" MG-1 Barometric Draft Control
Fan Proving Switch
Adjustable Post Purge

Recommended For Use On The Following Amana Model Furnaces:

GBI	GCIC	GUI	GUID	GCI	GHI	GUIA
GCIA	GMI	GUIB	GCIB	GSI	GUIC	

NOT For Use On The Following Amana Model Furnaces:

GCIS	GUIS	GUIV

Furnace Configuration and Vent Pipe Restrictions

Type B-1 vent pipe shall be used to join the furnace to the venting system and for the entire length of the venting system. Exception: Up to 24" of single wall vent pipe may be used to connect the furnace to the barometric damper. The barometric damper tee may be single wall. Type B-1/double wall vent pipe **MUST** be used from the barometric damper tee to the power venter.

For Furnace Models GUIA, GUIB, GUIC, and GUID				
BTU/Hr.	Diameter of Flue Collar on Furnace	Installer Provided Flue Pipe Transition Size Diameters	Maximum Equivalent Length (ft.) for 4" Vent Pipe	Maximum Equivalent Length (ft.) for 5" Vent Pipe
46,000	4"	None	100	100
69,000	4"	None	100	100
92,000	4"	None	100	100
115,000	4"	None	85	95
138,000	4"	None	65	80

For Furnace Models GCIA, GCIB, and GCIC				
BTU/Hr.	Diameter of Flue Collar on Furnace	Installer Provided Flue Pipe Transition Size Diameters	Maximum Equivalent Length (ft.) for 4" Vent Pipe	Maximum Equivalent Length (ft.) for 5" Vent Pipe
46,000	3"	3" to 4"	100	100
69,000	3"	3" to 4"	100	100
92,000	3"	3" to 4"	100	100
115,000	3"	3" to 4"	85	95
138,000	3"	3" to 4"	65	80

For Furnace Models GBI, GCI, GHI, GSI, and GUI				
BTU/Hr.	Diameter of Flue Collar on Furnace	Installer Provided Flue Pipe Transition Size Diameters	Maximum Equivalent Length (ft.) for 4" Vent Pipe	Maximum Equivalent Length (ft.) for 5" Vent Pipe
45,000	3"	3" to 4"	100	100
70,000	3"	3" to 4"	100	100
90,000	3"	3" to 4"	100	100
115,000	4"	None	85	95
140,000	4"	None	65	80

For Furnace Models GMI				
BTU/Hr.	Diameter of Flue Collar on Furnace	Installer Provided Flue Pipe Transition Size Diameters	Maximum Equivalent Length (ft.) for 4" Vent Pipe	Maximum Equivalent Length (ft.) for 5" Vent Pipe
40,000	3"	3" to 4"	100	100
60,000	4"	None	100	100
80,000	4"	None	100	100
100,000	4"	None	100	100
120,000	4"	None	80	90
140,000	4"	None	60	80

General Wiring

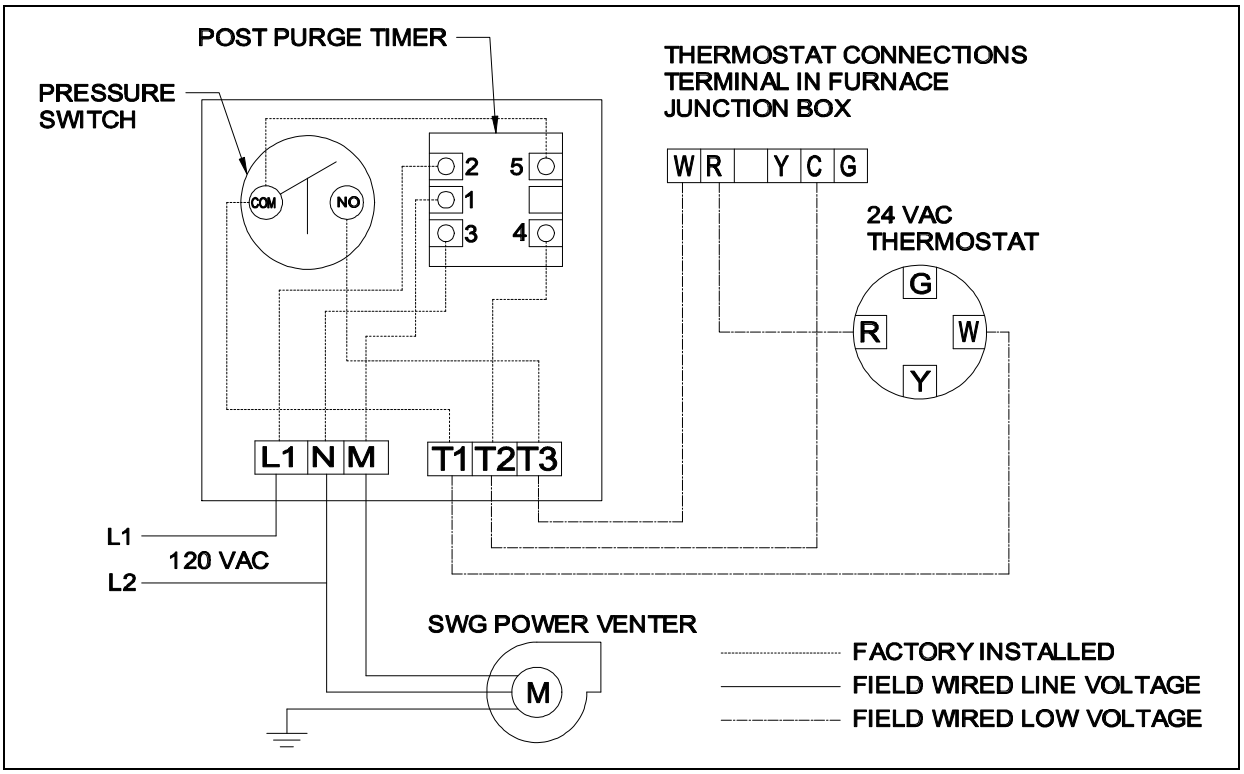

For complete installation information refer to the Field Controls SWG-4AM Power Venter Installation Manual for details (P/N 46333300.)

SWG-4AT AMERICAN STANDARD AND TRANE SIDEWALL POWER VENTING KIT
Field Controls P/N 46205405

Kit Includes:

SWGII-4HD Sidewall Power Venter
CK-43F Control Kit
Includes: 4" MG-1 Barometric Draft Control
Fan Proving Switch
Fixed post purge

For Use With The Following American Standard And Trane Furnaces:

AUD-C	CUE-A	ADD-R
TUD-C	TUE-A	TDD-R
AUD-R	ADD-C	CDE-A
TUD-R	TDD-C	TDE-A

Furnace Configuration And Vent Pipe Restrictions:

Furnace Input BTU/Hr	Diameter Of Vent Pipe Collar On Furnace (In.)	Maximum Equivalent Vent Length (Ft.)
40,000	4	65
60,000	4	65
80,000	4	65
100,000	4	65
120,000	4	65
140,000	4	65

General Wiring

Refer to the Diagrams on the following page for guidance in wiring the Power Venter and Control Kit to the appliance.

For complete installation information refer to the Field Controls SWG-4AT Power Venter Installation Manual for details (P/N 46306700.)

DIAGRAM C: WIRING FOR SINGLE STAGE FURNACE

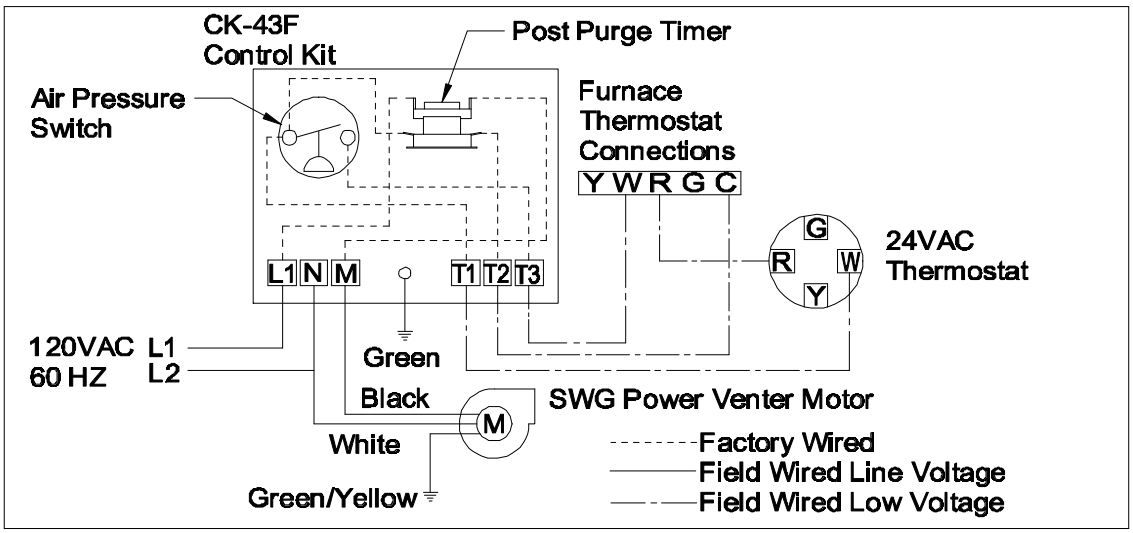

DIAGRAM D: WIRING FOR TWO STAGE FURNACE WITH SINGLE STAGE THERMOSTAT

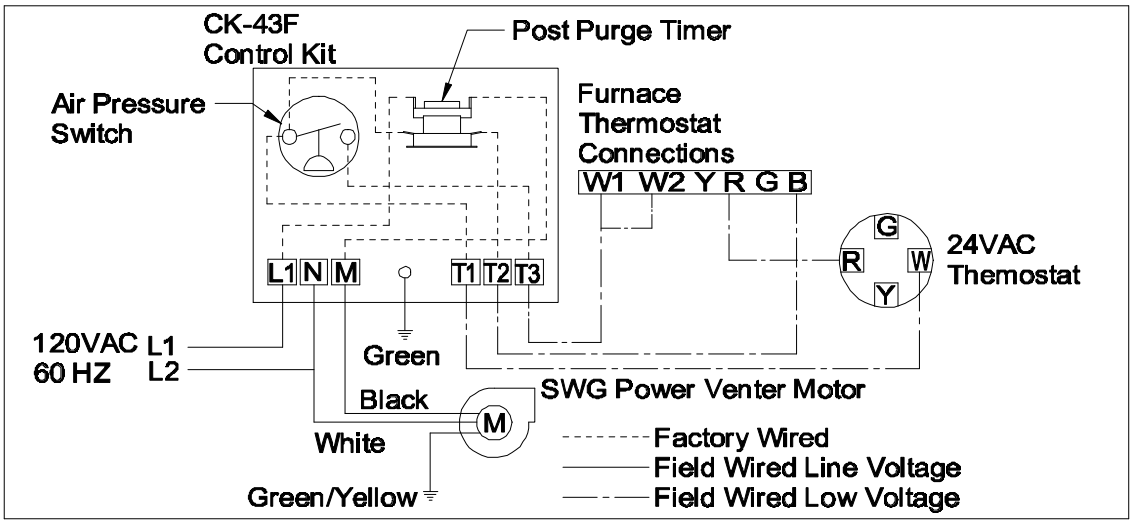

DIAGRAM E: WIRING FOR TWO STAGE FURNACE WITH TWO STAGE THERMOSTAT

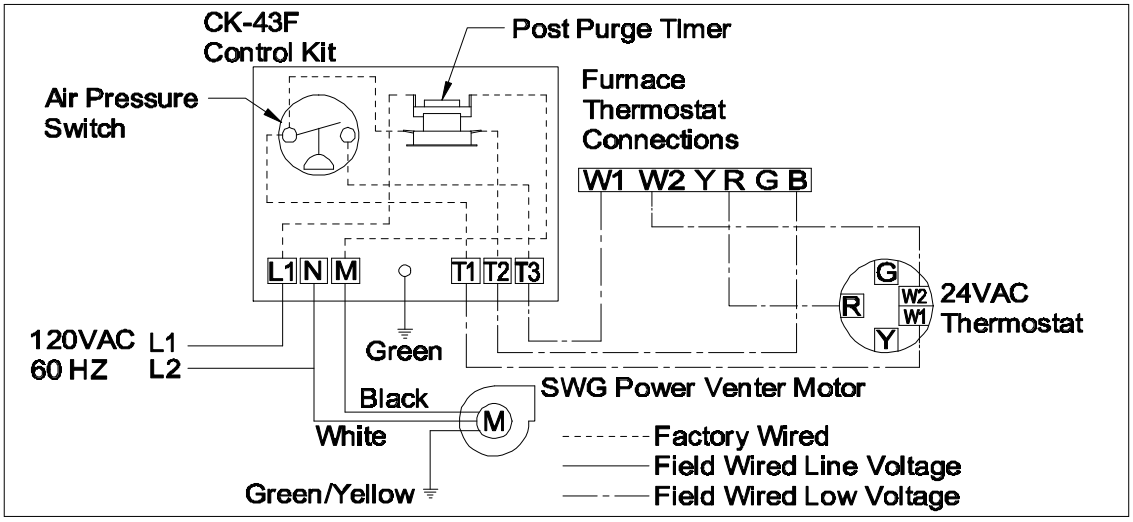

SWG-4A ARMSTRONG SIDEWALL POWER VENTING KIT
Field Controls P/N 46205407

Kit Includes:

SWGII-4HD Sidewall Power Venter
CK-43F Control Kit
Includes: 4" MG-1 Barometric Draft Control
Fan Proving Switch
Fixed post purge

For use with Armstrong furnace models that begin with the following:

AMEG6G	EG5G	EG6G	EG7G	EG8G	GCJ	GHJ	GUJ

Furnace Configuration and Vent Pipe Restrictions

Model Number	Configuration	Furnace Vent Collar Diameter (in.)	Max. Equivalent Vent Length (ft.); 4" Diameter Vent Pipe
AMEG6G	Upflow	4	60
EG5G	Lowboy	4	60
EG6G	Upflow	4	60
EG7G	Downflow	4	60
EG8G	Horizontal	4	41
GCJ	Downflow-Horizontal	4	60
GHJ	Upflow-Horizontal	4	60
GUJ	Upflow	4	60

General Wiring

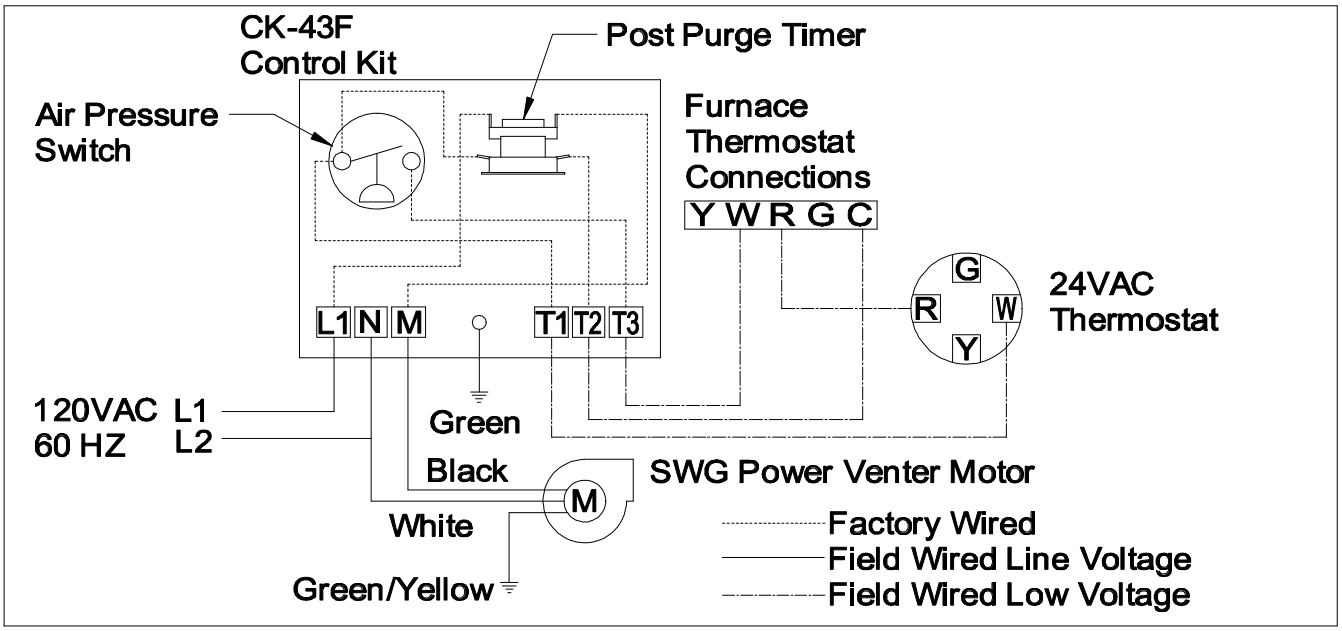

For complete installation information refer to the Field Controls SWG-4A Power Venter Installation Manual for details (P/N 46333500.)

SWG-4B BARD SIDEWALL POWER VENTING KIT
Field Controls P/N 46205410

Kit Includes:

SWGII-4HD Sidewall Power Venter
CK-43F Control Kit
Includes: 4" MG-1 Barometric Draft Control
Fan Proving Switch
Fixed post purge

For Use With The Following Bard Standard Furnaces:

Upflow	Downflow	Lowboy
IH60D36 (A,B)	IC60D36A	------
IH85D48 (A,B,D)	IC85D42 (A,D)	IL85D42 (A,D)
IH115D48 (A,B)	IC115D48A	IL115D48A
IH115D60A	------	------
IH145D60A	------	IL145D60A

Unit Selection Table:

Furnace Input Btu/Hr	Diameter Of Vent Pipe Collar On Furnace (In.)	Installer Provided Flue Pipe Transition Size*	Maximum Equivalent Vent Length (Ft.) 4" Vent Pipe
58,000	3"	3"-4"	65
86,000	4" **	3"-4" ***	65
115,000	4"	None Required	65
145,000	4"	None Required	65

* Transition should be attached to the furnace vent pipe collar if required.
** 86,000 Btu models with A or B suffix letter have 3" collars.
*** 86,000 Btu models with D suffix have 4" collars and do not require a 3" to 4" transition.

General Wiring

For complete installation information refer to the Field Controls SWG-4B Power Venter Installation Manual for details (P/N 46332100.)

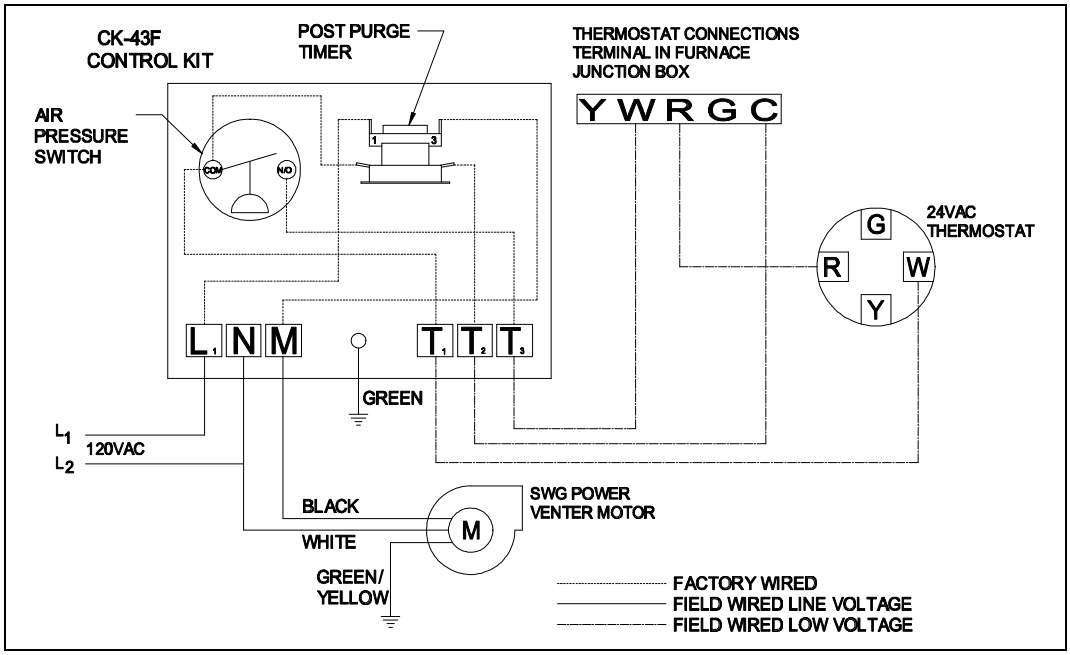

SWGII-4CC CARRIER SIDEWALL POWER VENTING KIT
Field Controls P/N 46205403, Carrier P/N KGASW03012SP

Kit Includes:

SWGII-4HD Sidewall Power Venter
CK-43CC Control Kit
Includes: 4" MG-1 Barometric Draft Control
Fan Proving Switch
Fixed post purge

For Use With The Following Carrier Furnace Models:

58UXT	58DXT	58UXV	58UHV	58TUA	58TMA
58WAV	58ZAV	58PAV	58RAV	GB1AAV	GB3AAV

For Use With The Following BDP Furnace Models:

330JAV	331JAV	333JAV	333BAV	330AAV	331AAV	395CAV
376CAV	383KAV	373LAV	480BAV	481BAV	GB1AAV	GB3AAV

For All Single-Furnace Systems:

Use one SWGII-4CC Kit for each furnace, and do not common-vent with other appliance(s). To common-vent these furnaces with other appliances, use SWGII-4HD Kit with instruction P/N 46139100 and a CK Series Control Kit for each appliance.

For All Two-Stage furnaces:

When setting up a two-stage furnace, the furnace should be operating on HIGH-STAGE HEAT while adjusting the sidewall power venter airflow adjustment damper, draft control, and proving switch.

VENTING INSTALLATION OPTIONS

FURNACE MODELS	4-in. dia. Type B-1 vent up to 40 ft. long, up to 4 elbows, and 1 tee **§**	3-in. dia. Type B-1 vent up to 40 ft. long, up to 4 elbows, and 1 tee **§**	Draft Safeguard Switch Assembly
Two-Stage models 58UXT 330JAV 58DXT 331JAV 58UXV 333JAV 58UHV 333BAV 58TUA 330AAV 58TMA 331AAV	PERMITTED WITH ALL GAS INPUT SIZES A 5"-to-4" reducer is required between furnace and vent for inputs greater than 105,000 Btu/hr.	PERMITTED WITH ALL GAS INPUT SIZES ‡ A reducer is required between furnace and vent for these inputs: up through 105,000 Btu/hr 4"-to-3" more than 105,000 Btu/hr 5"-to-3".	PERMITTED WITH OR WITHOUT THE DRAFT SAFEGUARD *
Single-Stage models 58WAV 395CAV 58ZAV 376CAV 58PAV 383KAV 58RAV 373LAV GB1AAV 480BAV GB3AAV 481BAV	PERMITTED WITH ALL GAS INPUT SIZES A 5"-to-4" reducer is required between furnace and vent for inputs greater than 115,000 Btu/hr.	PERMITTED WITH GAS INPUTS OF 88,000 Btu/hr AND LESS ‡ A 4"-to-3" reducer is required between furnace and vent.	PERMITTED ONLY **WITH** THE DRAFT SAFEGUARD †

* The furnace's Draft Safeguard switch assembly can remain in place as installed at the factory, or the Draft Safeguard switch assembly can be removed (relief box opening sealed with Block-off Plate and switch replaced with Splice Connector from Kit KGASW0101/02012SP).

† The Draft Safeguard switch assembly must remain installed and operational in the furnace.

§ See Equivalent Length Table II. Fewer elbows permit longer straight length & vice-versa.

‡ 3"-to-4" increaser is required between vent pipe and power venter.

General Wiring:

SINGLE-STAGE FURNACE WITH CK-43CC KIT

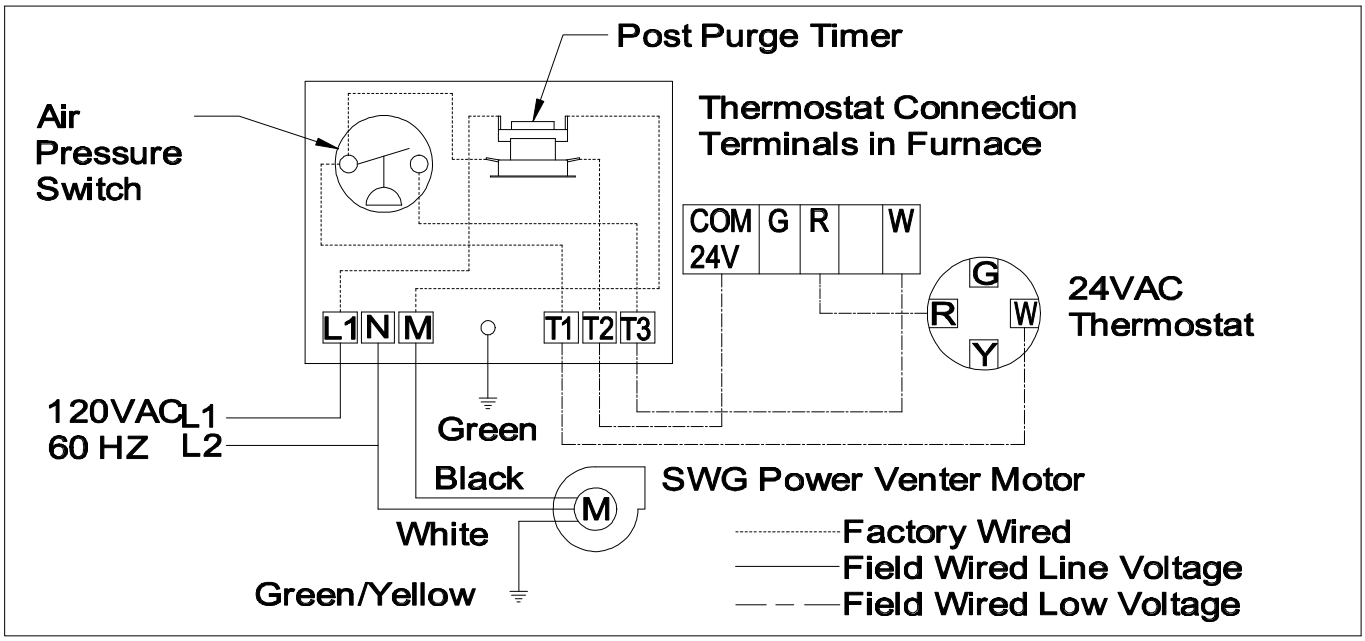

TWO-STAGE FURNACE WITH CK-43CC KIT

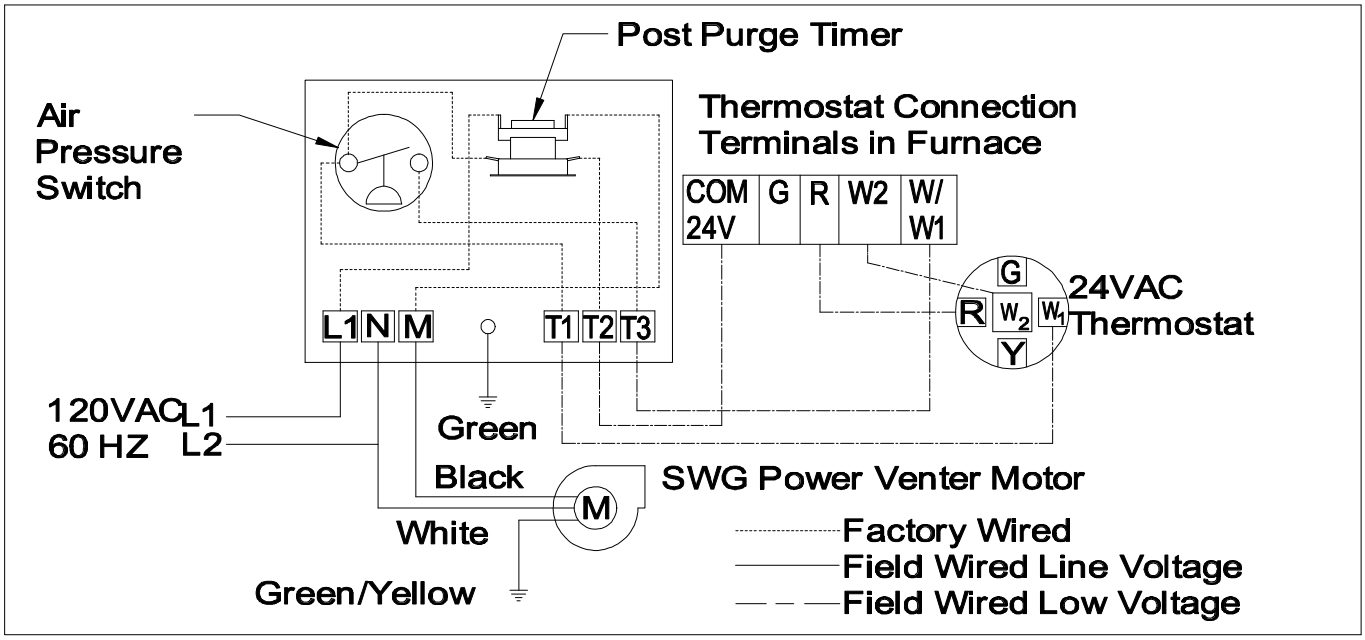

For complete installation information refer to the Field Controls SWGII-4CC Power Venter Installation Manual for details (P/N 46295100.)

SWG-4CD CONSOLIDATED SIDEWALL POWER VENTING KIT
Field Controls P/N 46205408

Kit Includes:

SWGII-4HD Sidewall Power Venter
WMO-1 Thermal Safety Switch (Must be purchased separately if using other venting kit on Consolidated Furnaces.)
CK-43F Control Kit
Includes: 4" MG-1 Barometric Draft Control
Fan Proving Switch
Fixed post purge

For use with the following series of furnaces:

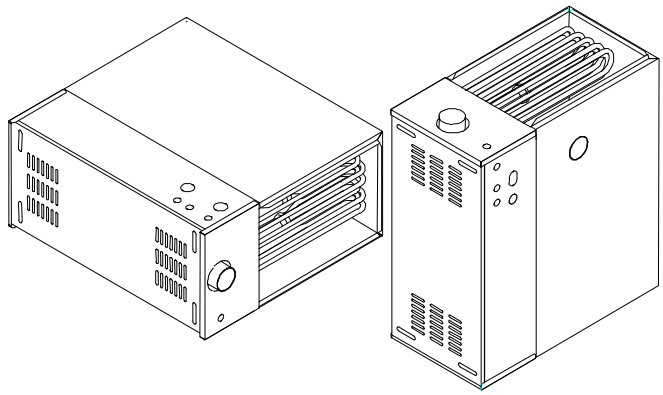

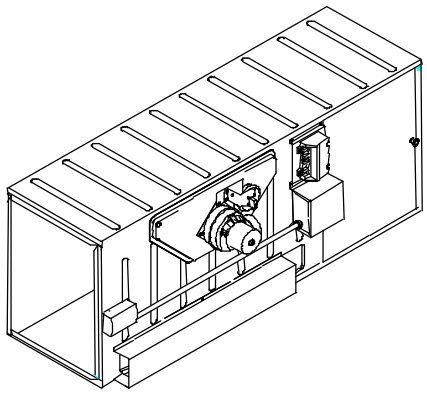

This furnace was built by CONSOLIDATED INDUSTRIES under the names: QUATRO, TECH-4, QUADPRO, QUADTECH, MULTIFLOW, BRENTWOOD, and SUNBURST.

Model Numbers:

MAA040NR2R	MBA040NH2R	MCA040NR2R	MDA040NH2R
MAA040NR3R	MBA040NH3R	MCA040NR3R	MDA040NH3R
MAA060NR2R	MBA060NH2R	MCA060NR2R	MDA060NH2R
MAA060NR3R	MBA060NH3R	MCA060NR3R	MDA060NH3R
MAA060NR4R	MBA060NH4R	MCA060NR4R	MDA060NH4R
MAA080NR2R	MBA080NH2R	MCA080NR2R	MDA080NH2R
MAA080NR3R	MBA080NH3R	MCA080NR3R	MDA080NH3R
MAA080NR4R	MBA080NH4R	MCA080NR4R	MDA080NH4R
MAA080NR5R	MBA080NH5R	MCA080NR5R	MDA080NH5R
MAA100NR3R	MBA100NH3R	MCA100NR3R	MDA100NH3R
MAA100NR4R	MBA100NH4R	MCA100NR4R	MDA100NH4R
MAA100NR5R	MBA100NH5R	MCA100NR5R	MDA100NH5R
MAA120NR4R	MBA120NH4R	MCA120NR4R	MDA120NH4R
MAA120NR5R	MBA120NH5R	MCA120NR5R	MDA120NH5R
MAA140NR4R	MBA140NH4R	MCA140NR4R	MDA140NH4R
MAA140NR5R	MBA140NH5R	MCA140NR5R	MDA140NH5R

Note: Model numbers may have suffix "X".

This kit may also be used with furnaces manufactured by Consolidated Industries and sold by a number of other companies under their names.

This furnace was built by CONSOLIDATED INDUSTRIES under the name PREMIER.

Model Numbers:

HBA040NR3R			
HBA060NR4R			
HBA080NR4R			
HBA100NR5R			
HBA120NR5R			

Note: Model numbers may have suffix "X".

This kit may also be used with furnaces manufactured by Consolidated Industries and sold by a number of other companies under their names.

General Information:

1. Maximum equivalent vent length is 63 feet for all furnaces listed!
2. The SWG-4CD power venter kit must be installed using type B-1 vent pipe only!

General Wiring

DIAGRAM C: WIRING FOR SINGLE STAGE FURNACE

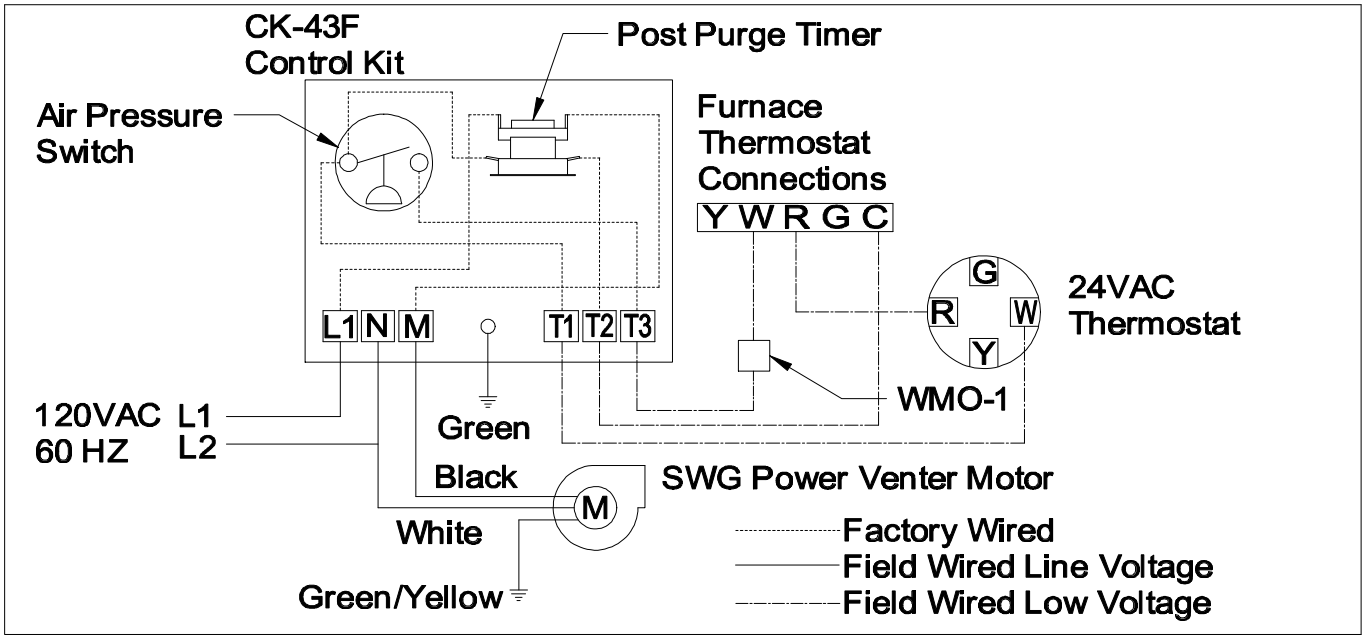

For complete installation information refer to the Field Controls SWG-4CD Power Venter Installation Manual for details (P/N 46333600.)

SWG-4D DUNKIRK SIDEWALL POWER VENTING KIT
Field Controls P/N 46205406

Kit Includes:

SWGII-4HD Sidewall Power Venter
CK-43D Control Kit
Includes: 4" MG-1 Barometric Draft Control
Fan Proving Switch
Adjustable post purge

For use with the Dunkirk Radiator Boiler Models XEB 2-5 or Equivalent*

*To determine equivalent models, call (716)366-5500 and ask for Technical Service Department

Unit Sizing and Equivalent Footage

Max. Horizontal Vent Run	Min. Horizontal Vent Run
50'+ Tee with a 3"x4" increaser for the barometric draft control + 3"x4" increaser with power venter	2'+ 90° elbow + tee with a 3"x4" increaser for the barometric draft control + 3"x4" increaser with power venter

For additional elbows, reduce the maximum vent length as follows:

3” x 90° elbow - reduce vent length by 3 feet for each elbow

Standard 3" single walled galvanized venting or 3" Type B vent pipe should be used.

Draft Control Installation:

1. Install a 3" vent pipe tee of the same material as the vent piping 12" to 24" away from the outlet of the boiler's blower. Then place a 3"X4" reducer in the tee for mounting the barometric draft control as shown in the Figure below.

2. Seal the vent pipe tee and reducer using the sealing and joining procedures in the boiler installation instructions. Seal the barometric draft control into the tee using the same high temperature silicone as used on the vent piping.

3. The front face of the control MUST be plumb and the bearing surfaces MUST be level whether the control is on a horizontal, vertical, or sloping vent pipe. Use a spirit level and level accurately. If necessary, the control may be held in place by sheet metal screws.

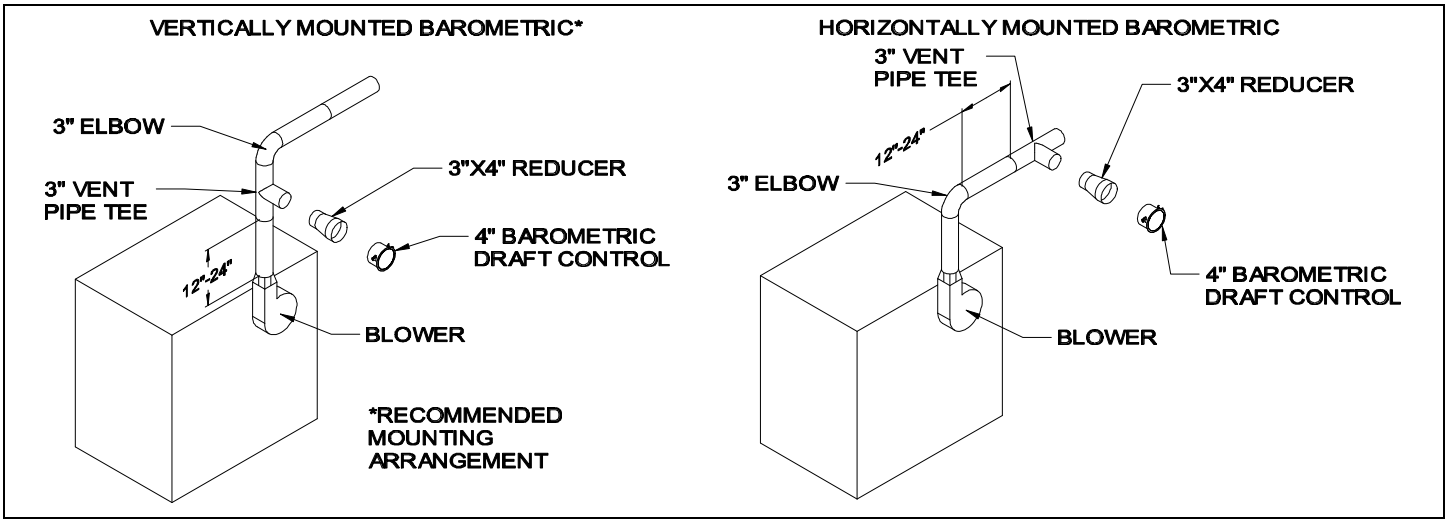

Dunkirk instructions continued on next page.

General Wiring

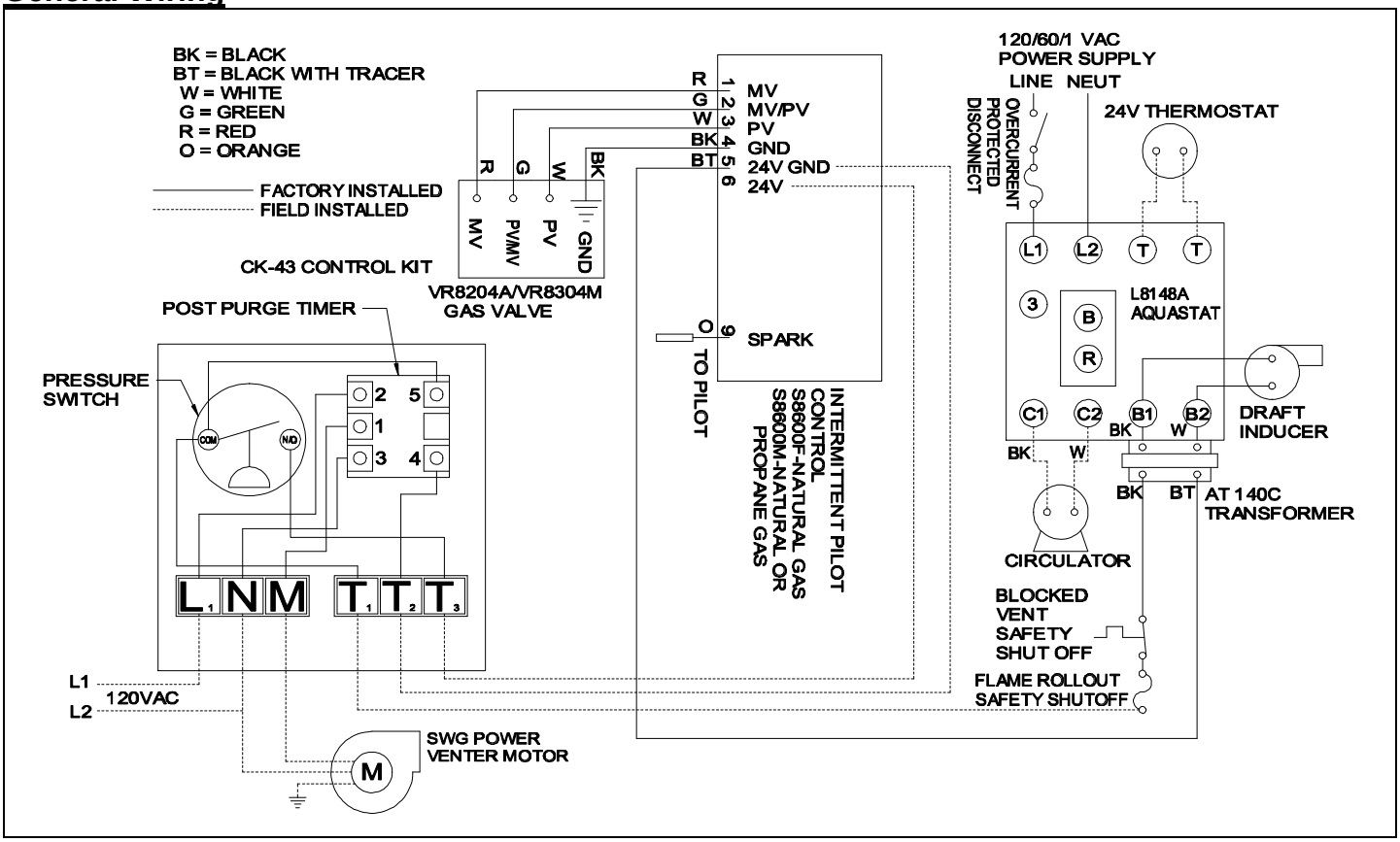

For complete installation information refer to the Field Controls SWG-4D,5D Power Venter Installation Manual for details (P/N 46298400.)

SWG-4E EVCON SIDEWALL POWER VENTING KIT
Field Controls Standard Model SWGII-4HD and CK-43F

Kit Includes:

SWGII-4HD Sidewall Power Venter
CK-43F Control Kit
Includes: 4" MG-1 Barometric Draft Control
Fan Proving Switch
Fixed post purge

For Use On The Following Evcon Series of Furnace Models:

2800	AGU	BGU

General Wiring:

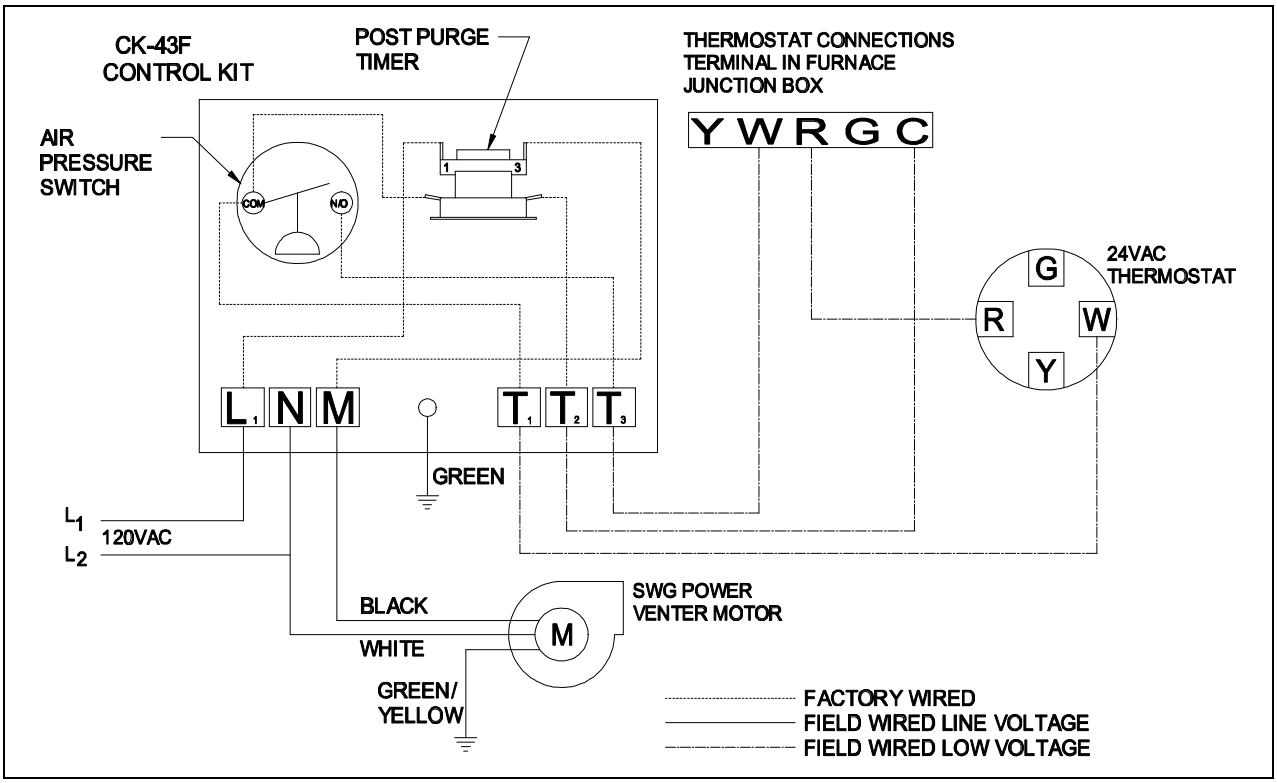

For complete installation information refer to the Standard Field Controls SWG/SWGII series Power Venter Installation Manual (P/N 46139100), and the CK-43F Control Kit Installation Manual (P/N 46285100) for details.

SWG-4IC INTER-CITY SIDEWALL POWER VENTING KIT
Field Controls P/N 46205401

Kit Includes:

SWGII-4HD Sidewall Power Venter
CK-43 Control Kit
Includes: 4" MG-1 Barometric Draft Control
Fan Proving Switch
Adjustable Post purge

For Use With The Following Furnace Models:

GDJ	GDL	GNI	GNJ	GNL	CUGE	CUG5
NCC5	NDC7	NDN5	NTC5	NTC7	NTN5	NUG5

Unit Sizing:

BTU/HR Input	Diameter Of Vent Pipe To Power Venter	Flue Pipe Transition Size Diameter
50,000	3”	3” TO 4”
75,000	4”	None Required
100,000	4”	None Required
125,000	4”	None Required

Maximum Pipe Length - (3) 90° Elbows, 30 feet of vent pipe and reducer or increaser if required.
Minimum Pipe Length - (1) 90° Elbow, 5 feet of vent pipe and a reducer or increaser if required.

General Wiring

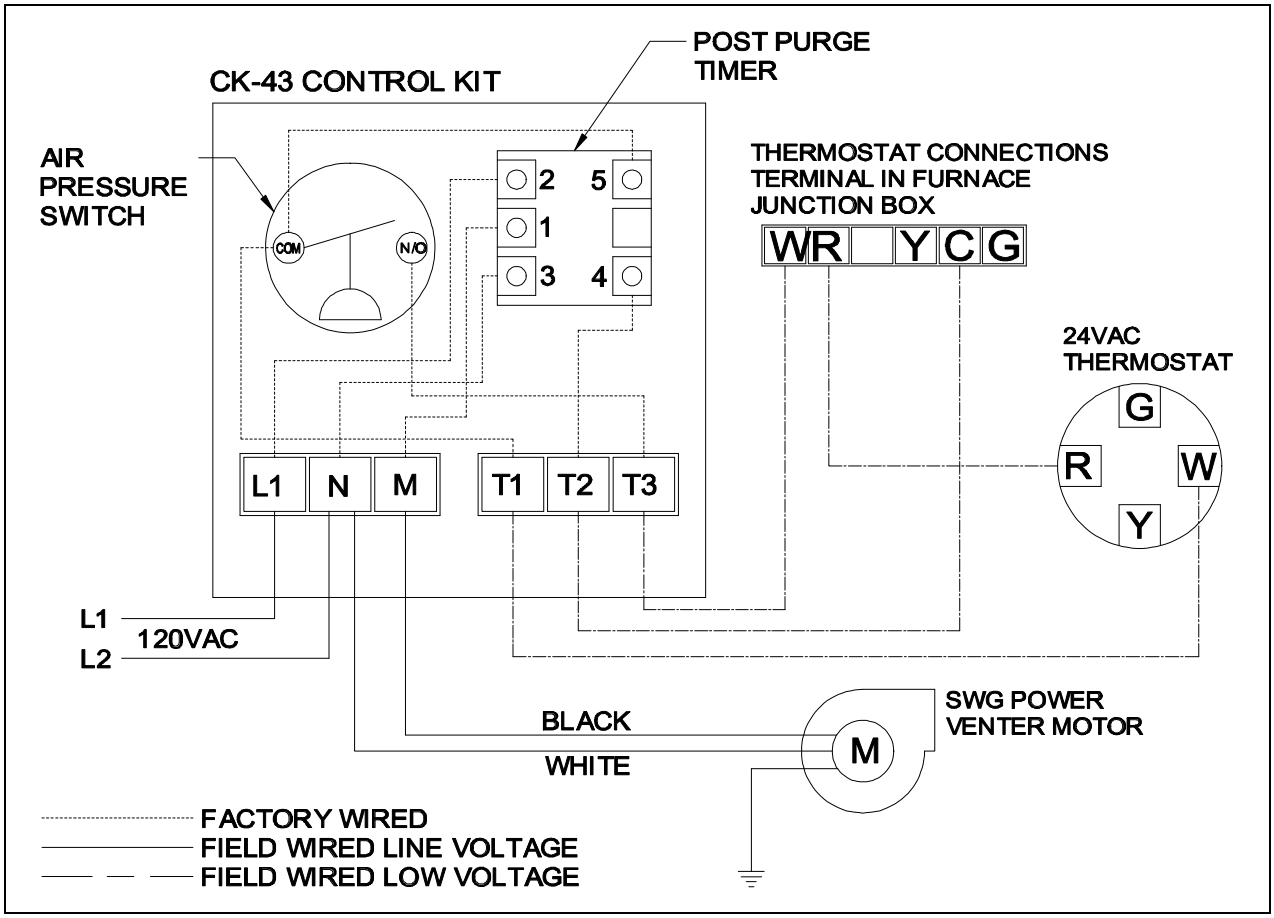

For complete installation information refer to the Field Controls SWG-4IC Power Venter Installation Manual for details (P/N 46201400.)

SWG-4ICF INTER-CITY SIDEWALL POWER VENTING KIT
Field Controls P/N 46205413

Kit Includes:

SWGII-4HD Sidewall Power Venter
CK-43F Control Kit
Includes: 4" MG-1 Barometric Draft Control
Fan Proving Switch
Fixed post purge

For Use With The Following Series Of Furnaces

GDJ	GDL	GNI	GNJ	GNL	CUGE	CUG5
NCC5	NDC7	NDN5	NTC5	NTC7	NTN5	NUG5

Unit Selection Table

BTU/HR Input	Diameter Of Vent Pipe To Power Venter	Flue Pipe Transition Size Diameter
50,000	3"	3" TO 4"
75,000	4"	None Required
100,000	4"	None Required
125,000	4"	None Required

General Wiring

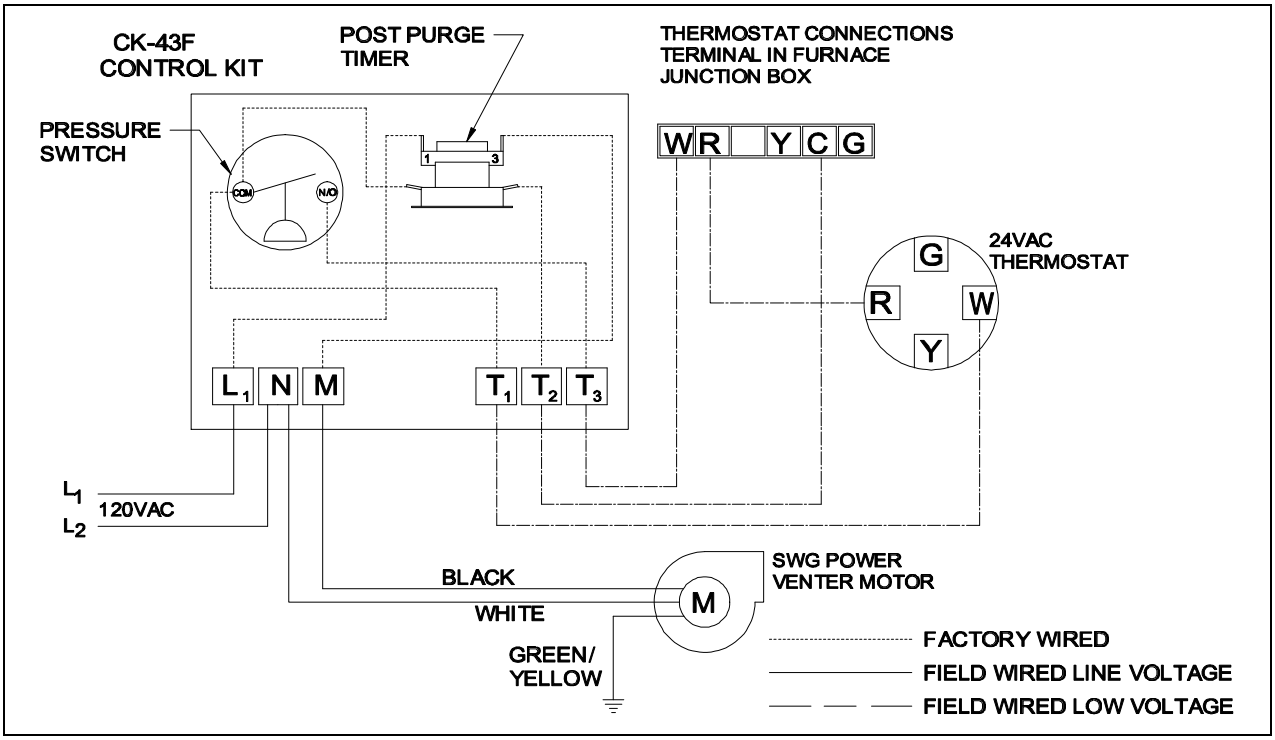

For complete installation information refer to the Field Controls SWG-4ICF Power Venter Installation Manual for details (P/N 46319700.)

SWG-4L LENNOX SIDEWALL POWER VENTING KIT
Field Controls P/N 46205402

Kit Includes:

SWGII-4HD Sidewall Power Venter
CK-43 Control Kit
Includes: 4" MG-1 Barometric Draft Control
Fan Proving Switch
Adjustable post purge

For Use On The Following Lennox Series Furnaces:

G23	G24M	80MGF

Unit Selection And Maximum Vent Length Table

BTU/Hr Input	Diameter Of Vent Pipe Collar On Furnace	Installer Provided Flue Pipe Transition Size Diameters	Maximum Equivalent Length (Ft) For 4" Vent Pipe	Maximum Equivalent Length (Ft) For 5" Vent Pipe
45,000*	3"	3" to 4"	60	60
50,000	3"	3" to 4"	60	60
60,000*	3"	3" to 4"	60	60
75,000*	4"	None Required	60	60
100,000*	4"	None Required	60	60
120,000*	4"	None Required	60	60
125,000	5"	4" to 5"	60	60
140,000*	4"	None Required	48	60
150,000	5"	4" to 5"	35	60

*G24M/80MGF Input Rates

General Wiring:

For complete installation information refer to the Field Controls SWG-4L Power Venter Installation Manual for details (P/N 46257600.)

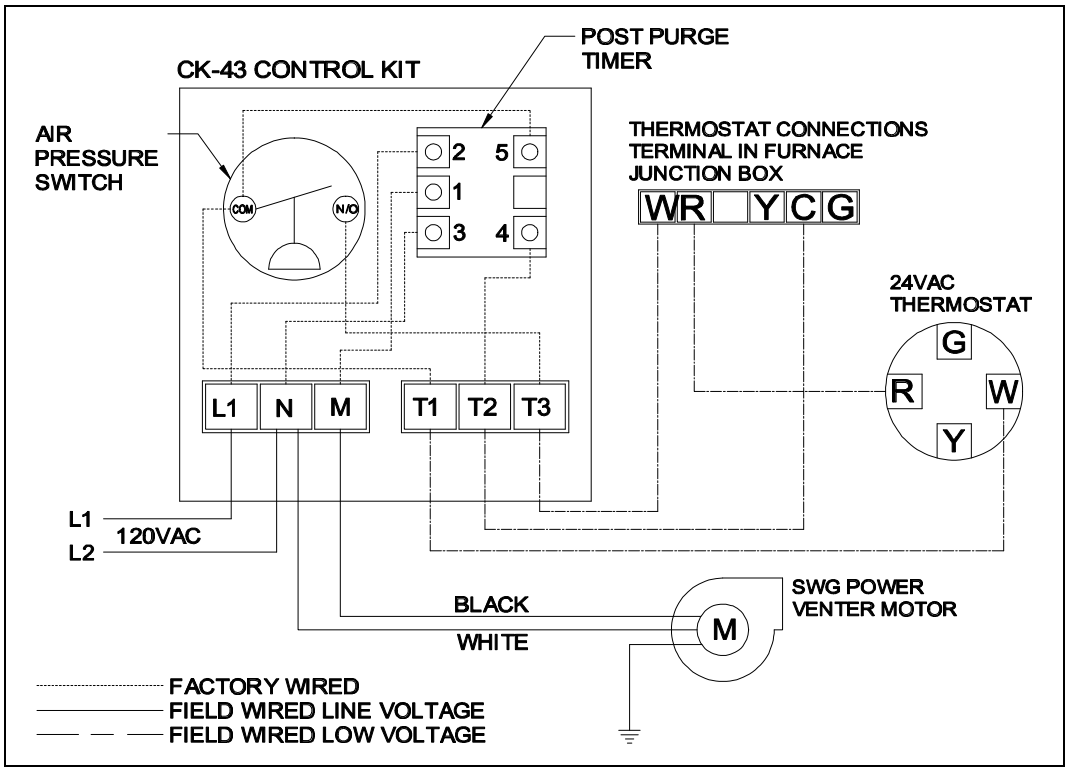

SWG-4R RHEEM SIDEWALL POWER VENTING KIT
Field Controls P/N 46205409

Kit Includes:

SWGII-4HD Sidewall Power Venter
CK-43R Control Kit
Includes: 4" MG-1 Barometric Draft Control
Fan Proving Switch
Fixed post purge

For Use With The Following Rheem, Ruud, And Weatherking Model Series Furnaces:

(-)GDG*	(-)GDJ*	(-)GVH*	(-)GPH*	(-)GLG	(-)GLH*	(-)GVG	(-)GLJ*
(-)GPJ*	(-)GVJ*	(-)GDC	(-)GLC	(-)GDE	(-)GLE	(-)GVC	(-)GYC
(-)GVA	(-)GYA	(-)GVB	(-)GYB	WGVAH	WGVAG	WGDAG	WGLAG

*Indicated models are CGA certified with the SWG-4R as a vent system.

Indicated 45,000 and 67,500 BTU furnaces must not be auxiliary power vented unless the original vent pressure switch is replace with a 0.30 vent pressure switch, Rheem P/N 42-24064-01. Failure to replace the pressure switch as specified could lead to improper operation of the furnace resulting in property damage, personal injury, or death.

Application & Installation Notes:

1. READ THE POWER VENTER APPLICATION & INSTALLATION INSTRUCTIONS VERY CAREFULLY BEFORE ATTEMPTING TO INSTALL AND/OR OPERATE THE POWER VENTER.
2. Do not use this kit with HTPV or SVS vent pipe. Use only “B” type vent pipe.
3. Do not exceed 30 linear feet of type “B” vent pipe or maximum of three 90° elbows.
4. Carefully observe the minimum required % combustion efficiency and the maximum measure flue gas temperature.
5. Each furnace must have a dedicated power venter. Common venting with more than one appliance to a power venter is not permitted.
6. Note: Where a 3” to 4” and 4” to 6” vent pipe transitions are necessary, use only tapered transitions.
7. The barometric draft control is supplied with the power venting kit. (It is required, but not supplied with the Tjernlund kit.) Regardless of vent pipe diameter size, a 4” diameter gas furnace barometric draft control is required to be installed with in three (3) feet of the furnace cabinet.
8. Do not attempt to use this power venter on a furnace equipped with a draft hood or a vent damper.
9. Carefully observe ambient air temperature limitations.

Important: Under no circumstances can any standing pilot furnace be horizontally vented.
Under no circumstances can any additional appliances be common vented with the furnace by the Field Controls SWG-4R.
Under no circumstances can a furnace equipped with a natural draft diverter be horizontally vented.

Vent Specifications:

1. All vent pipe and elbows must be Type B, double wall vent.
2. The maximum vent length is 30 feet with a maximum of three 90° elbows.
3. The minimum vent length is 5 feet.
4. Use 3" vents for models with inputs through 75,000 BTU/Hr.
5. Use 4" vents for models with inputs over 75,000 BTU/Hr.
6. A 4" barometric damper is included in the power venter kit. When 3" vent pipe is used, a 3" to 4" single wall increaser is required for connecting the barometric damper and for connecting the power venter. A single wall increaser will also be required at the furnaces with 3" outlet collars when 4" vent pipe is used.

General Wiring

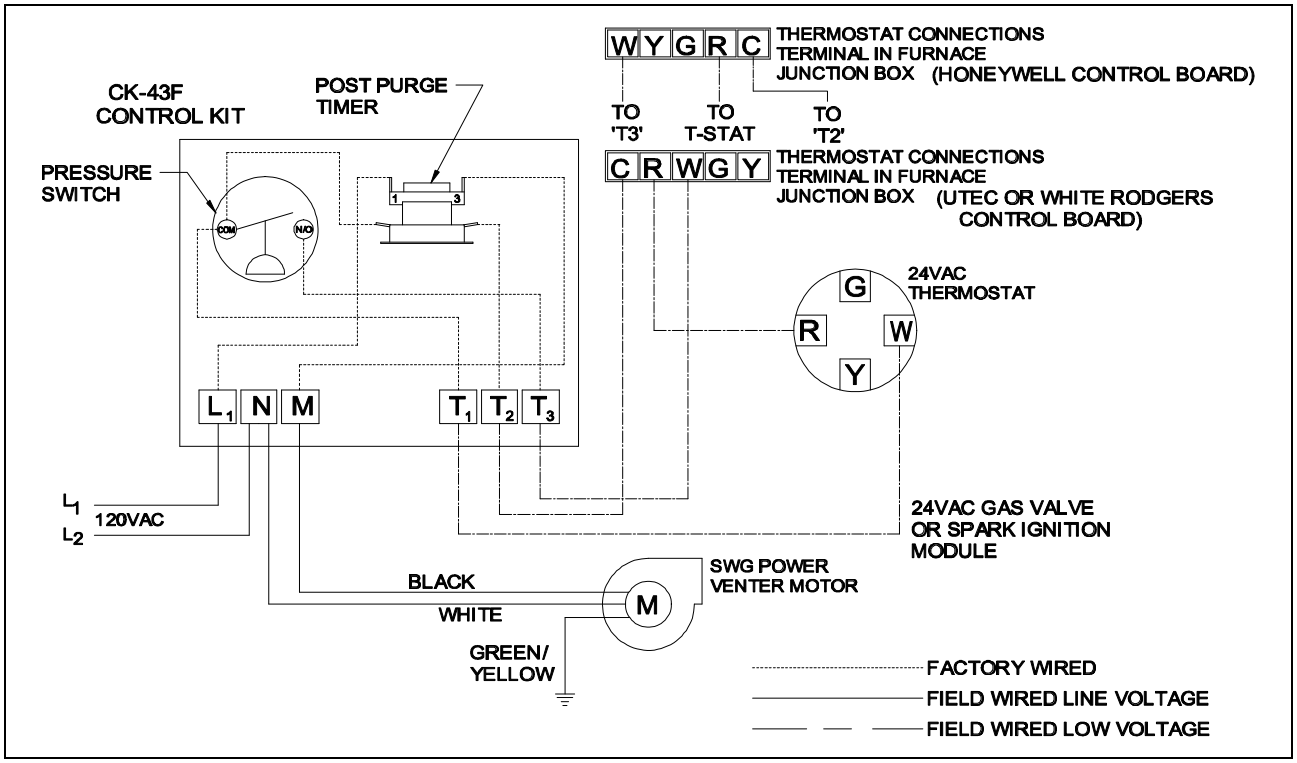

For complete installation information refer to the Field Controls SWG-4R Power Venter Installation Manual for details (P/N 46331300.)

SWG-4Y YORK SIDEWALL POWER VENTING KIT
Field Controls Part #46205404

Kit Includes:

SWGII-4HD Sidewall Power Venter
CK-43F Control Kit
Includes: 4" MG-1 Barometric Draft Control
Fan Proving Switch
Fixed post purge

Approved For Use On The Following York International Model Furnaces:

P1UK	P2MP	P9MP	P2DP	P3UC	P9UC	P3CC	P9CC	PKMD
PAKU	PBKM	XEM	PBKD	XED	PCMU	PKMU	PCMD	

Unit Sizing And Equivalent Footage

Refer to the following to choose the proper size vent pipe and fittings for connecting the SWG power venter to the appliance. The following table also lists the maximum equivalent length of vent pipe allowed, depending on the appliance input rating and the diameter of vent pipe used.

BTU/Hr Input	Diameter Of Vent Pipe Collar On Furnace	Installer Provided Flue Pipe Transition Size Diameters	Maximum Equivalent Length (Feet)
			4" Vent Pipe
40,000	3"	3" TO 4"	100
60,000	3"	3" TO 4"	100
80,000	4"	None Required	100
100,000	4"	None Required	100
120,000	4"	None Required	80
140,000	4"	None Required	65

General Wiring

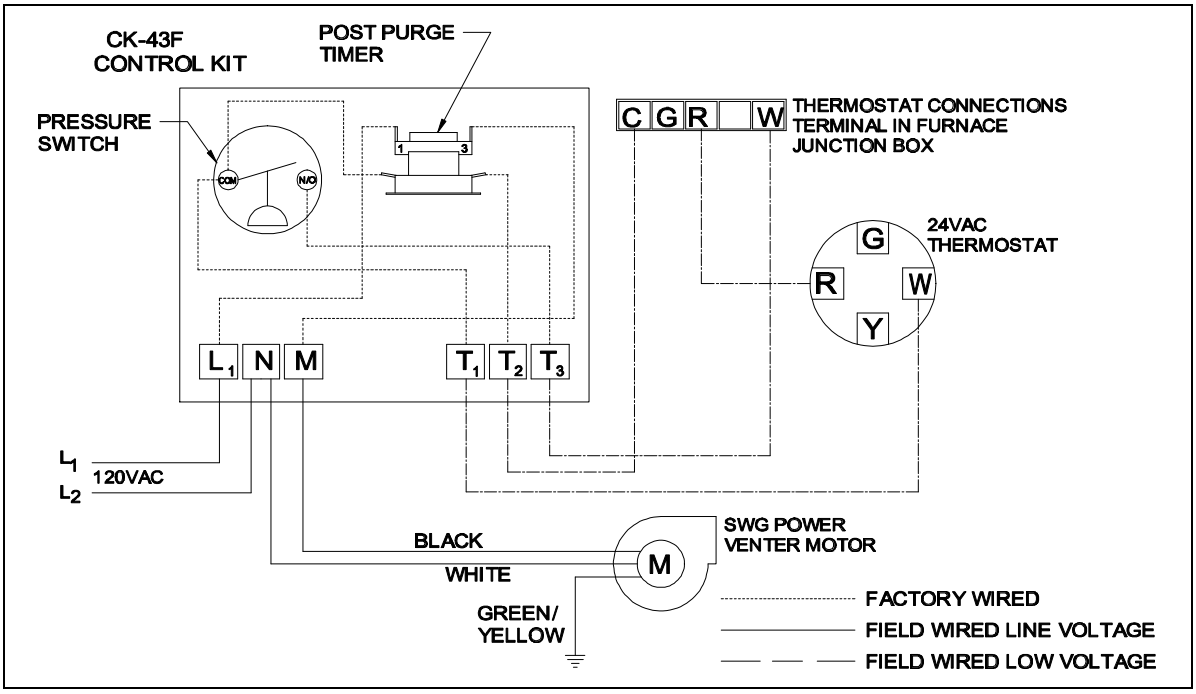

For complete installation information refer to the Field Controls SWG-4Y Power Venter installation manual for details (P/N 46297600.)

P/N 46334200