BOSCONI

VANITIES

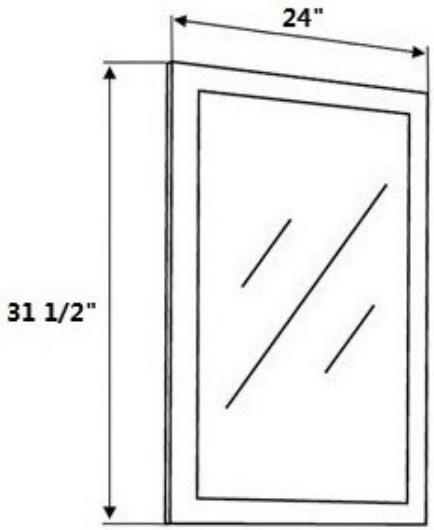

MIRROR

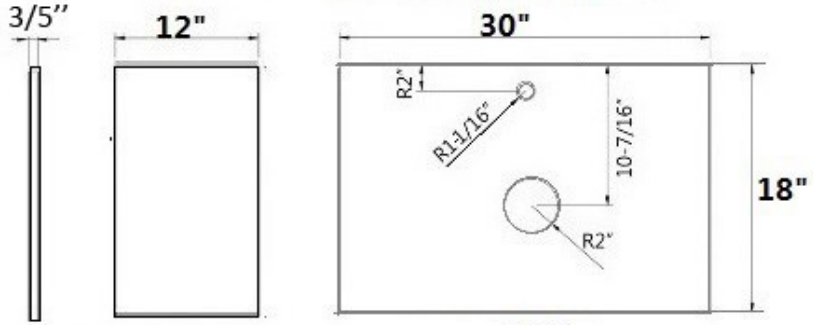

SIDE CABINET TOP

TOP

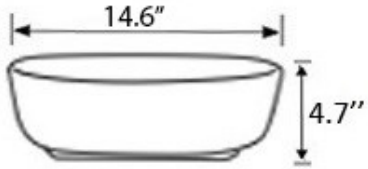

SINK

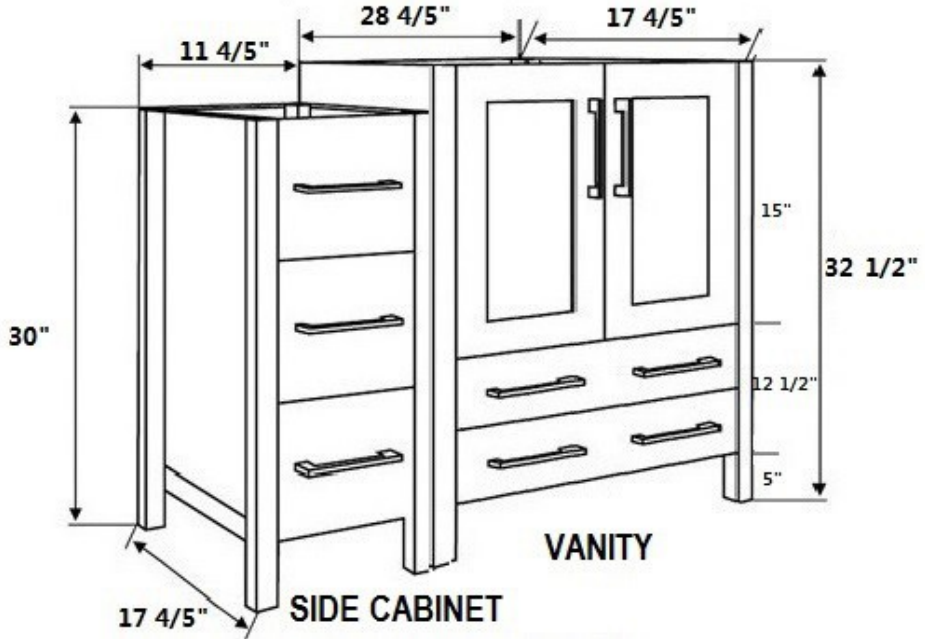

VANITY

SIDE CABINET