HOME
DECORATORS
COLLECTION

Studio Craft Wall Shelf Large
Assembly Instructions

Hardware Included

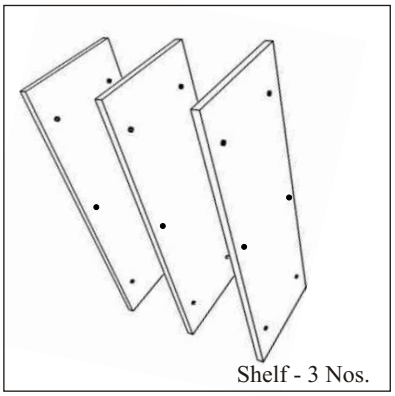
Shelf - 3 Nos.

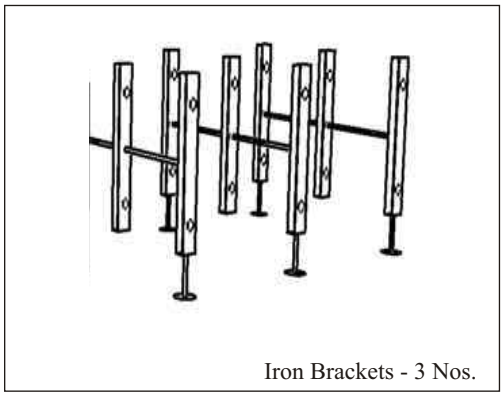
Iron Brackets - 3 Nos.

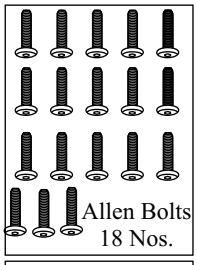
Allen Bolts 18 Nos.

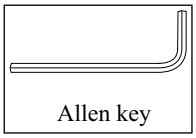
Allen key

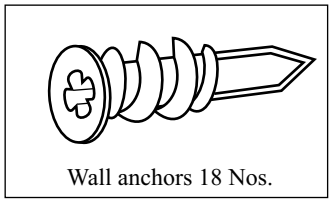
Wall anchors 18 Nos.

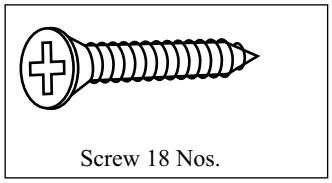
Screw 18 Nos.

Step-1 Insert the wooden shelves into the metal bracket and align holes of metal bracket with holes in the wooden shelves.

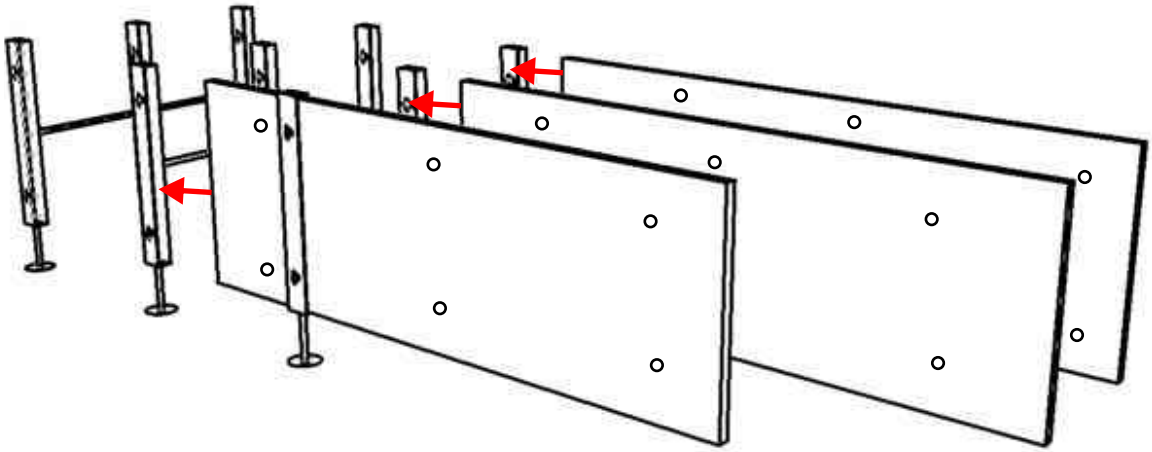

Step-2 Attach wooden shelves with metal brackets with allen bolts. Tighten allen bolts with allen key.

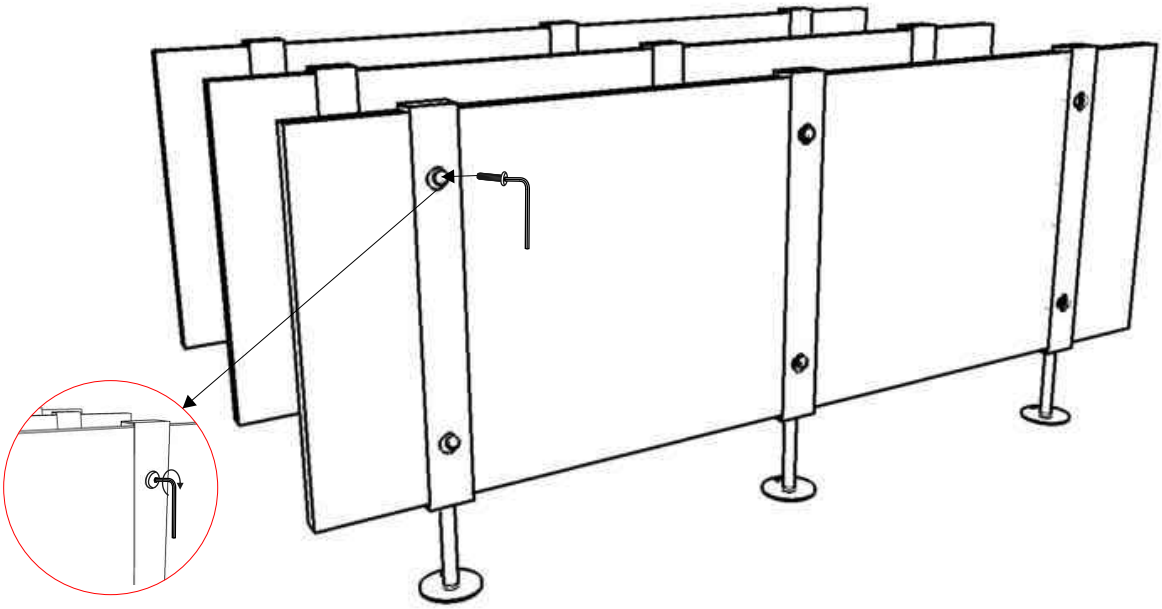

Step-3 Mark the position of holes on the wall with the help of pencil.

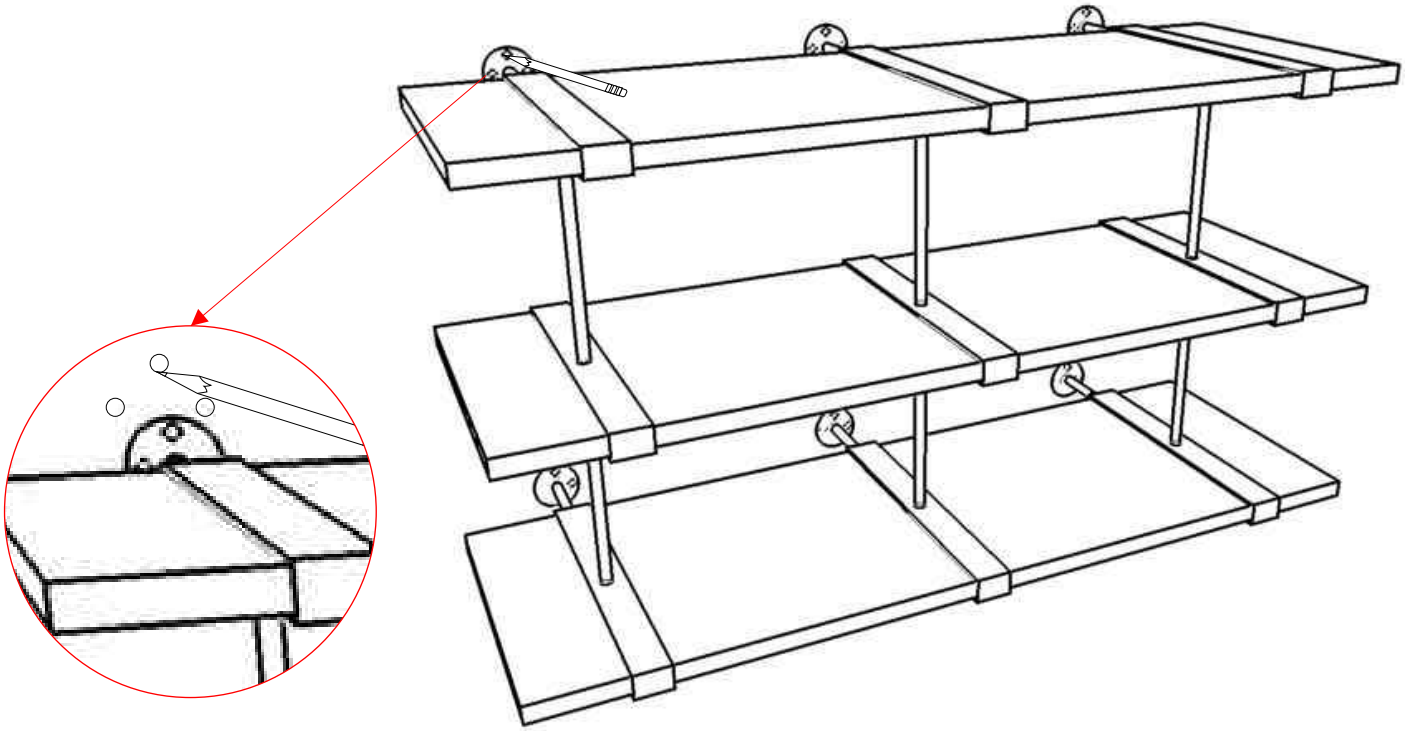

Step-4 Drill holes into the wall at marked locations and insert wall anchors into the holes on the wall. Fix the wall shelf with the help of screws using a screw driver(not provided).

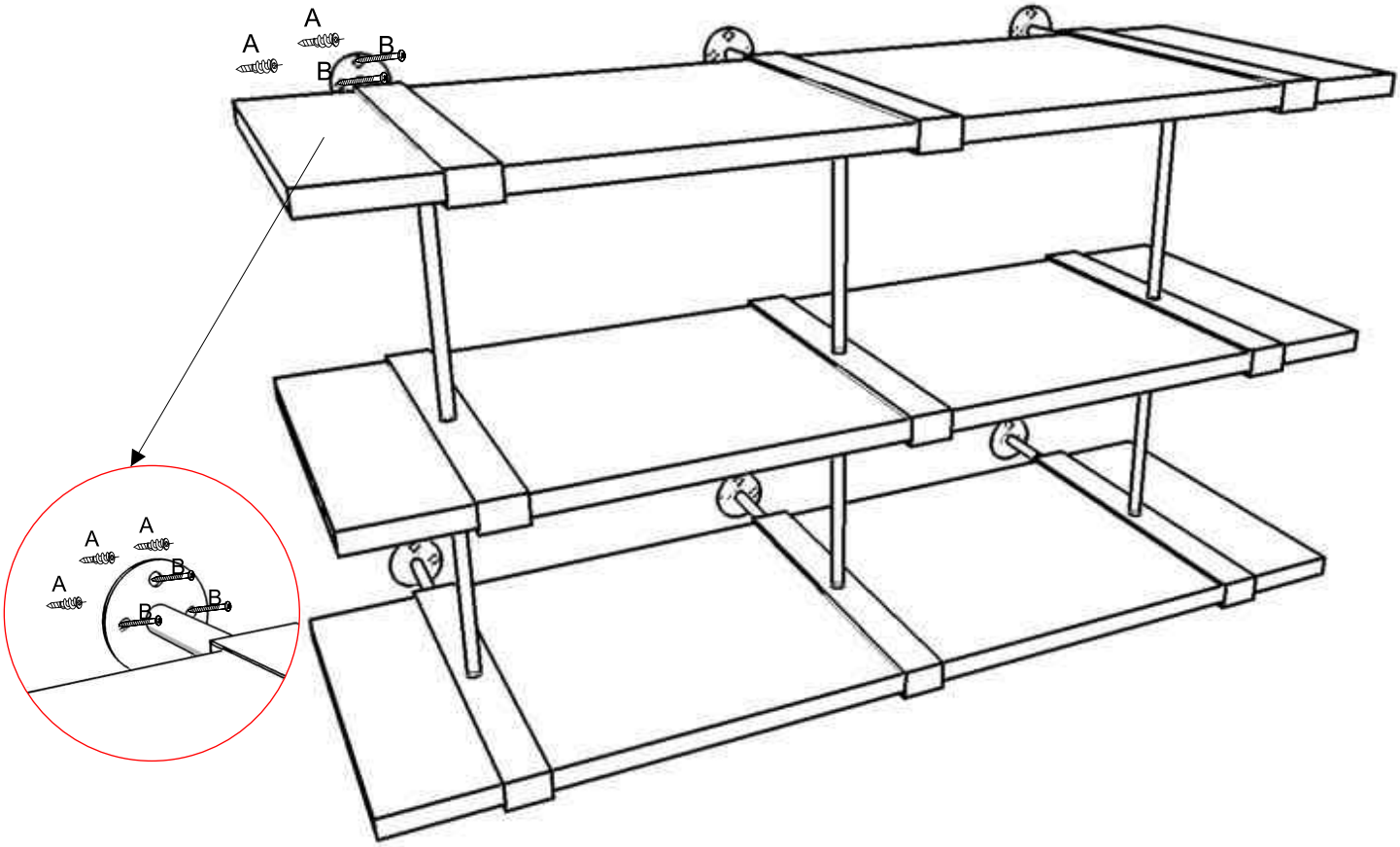

Caution: DO NOT LOAD THE UNIT WITH MORE THAN 300 lbs.