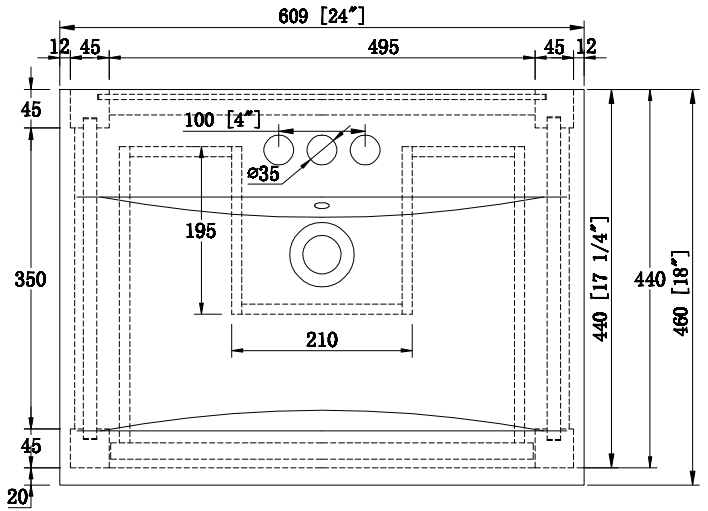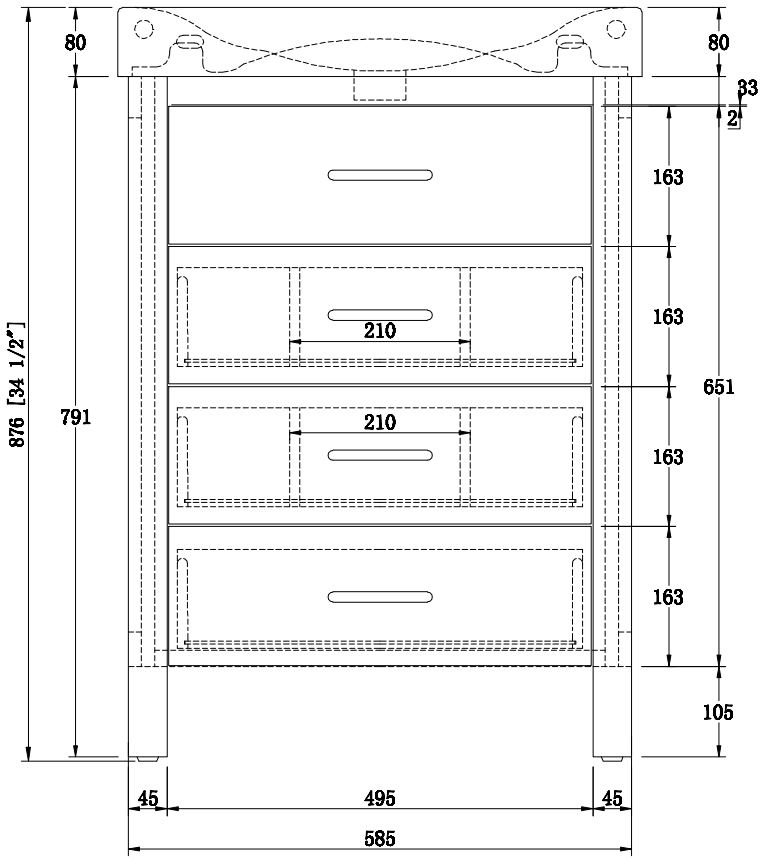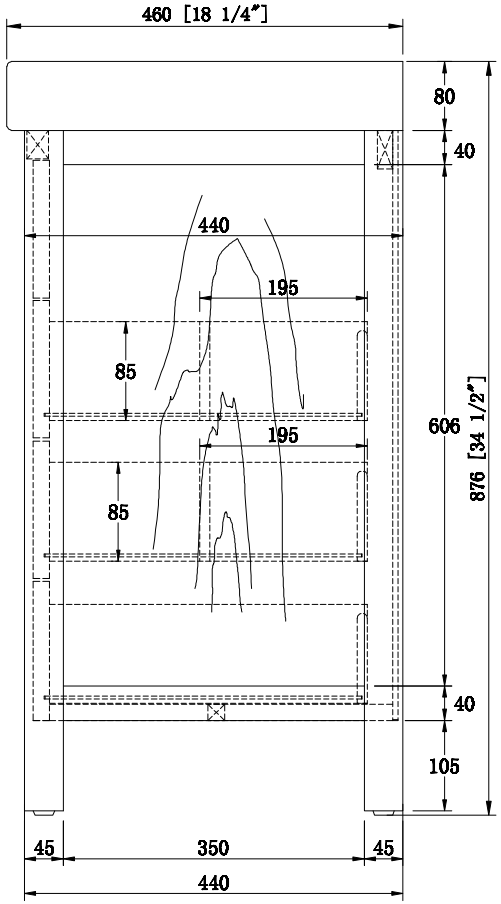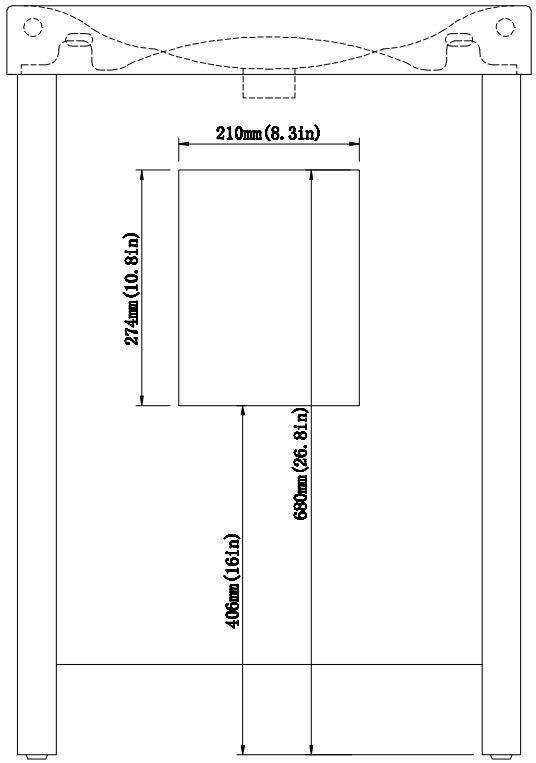Cedardon-Vanity-TD
SIZE:24″*18″*34-1/2″