BOSCONI VANITIES

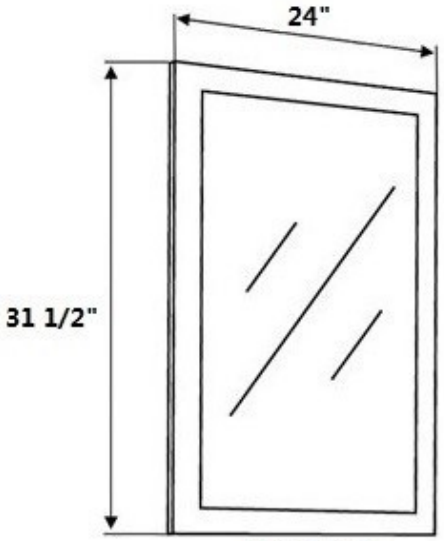

MIRROR

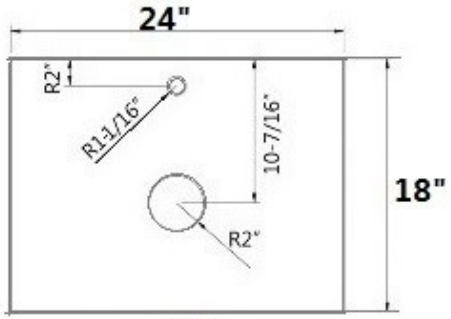

TOP

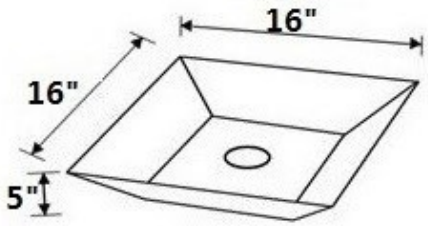

SINK

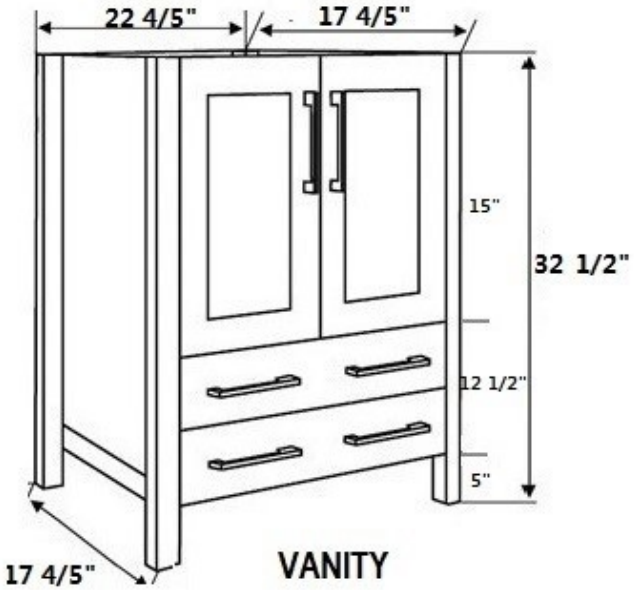

VANITY