Maintenance

Please do the cleaning regularly to keep the shinning surface of your faucet.

1. Clean the faucet with clear water, then dry the faucet with soft cotton cloths.

2. Do not use any acid or abrasive detergent or even abrasive cloth to clean the faucet.

3. Remove the aerator and clean the dirty to keep the water running smoothly on a regular time schedule.

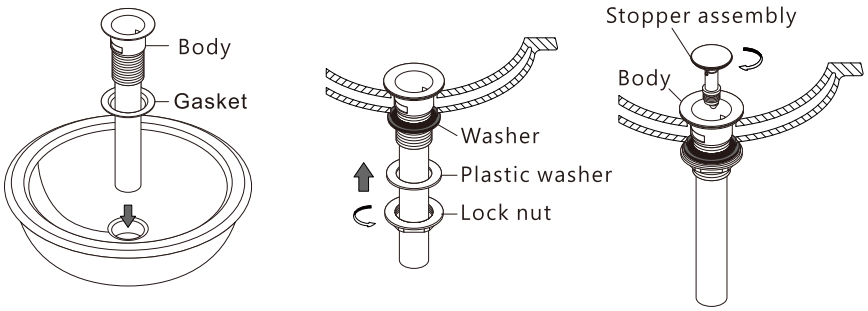

Push Operated pop-Up Drain Installation

1. Install pop-up body and gasket into the hole.

2. Install washer, plastic washer and lock nut onto pop-up body from underneath the basin. And then tighten lock nut.

3. Put stopper assembly into drain. And then tighten stopper assembly to connect with pop-up body.

S/N	NAME
9	inlet hoses
8	screw
7	locking nut
6	metal gasket
5	rubber gasket
4	thread shank
3	O-ring
2	sink
1	faucet body

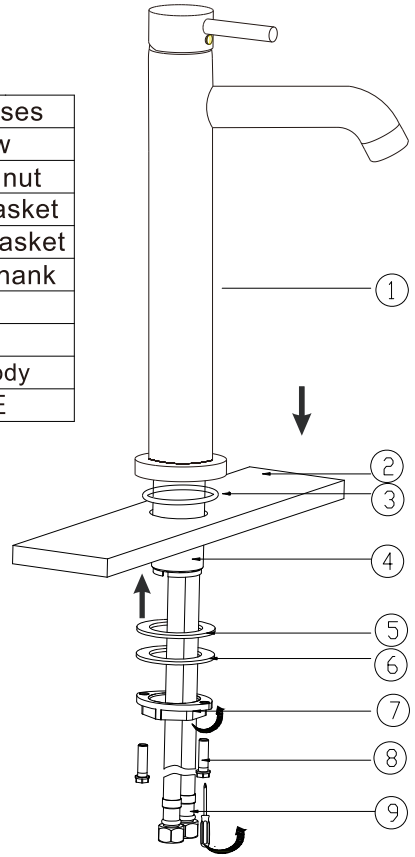

Bathroom Sink Faucet (Single Hole) Installation

1. Drill a Ø1.3"- Ø1.38"hole into the sink, put the gasket(3)into the groove under the faucet body(1).

2. nsert the faucet body(1) on the sink through the hole, put on the rubber gasket (5) and metal gasket (6) in order, then lock the locking nut (7). and tight it with the screw(8).

3. Connect the flexible hose with the supply tube, left(red) for hot water, right (blue) for cold.