Assembly Instructions

Lift Chair-5001

Your recliner comes packaged in one box. Carefully remove all of The components from the packaging and set aside for assembly.

CAUTION:

DO NOTuse any sharp objects to open plastic wrapped components as damage to product or components may result.

Package Contents

	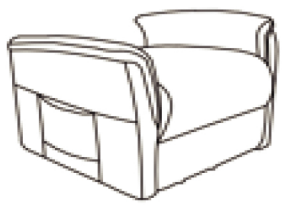			
A 1*Seat Back	**B** 1*Seat	**C** 1 *Transformer	D 1*Weir Plug	E 1*Remote Control

Step 1

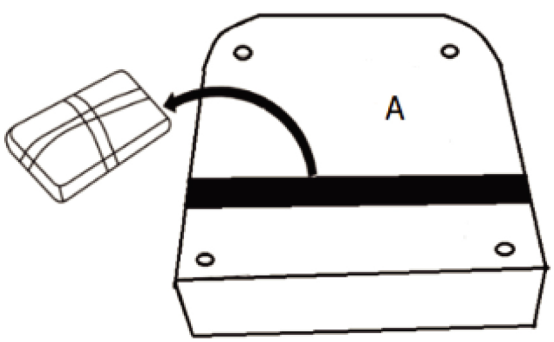

Step 2

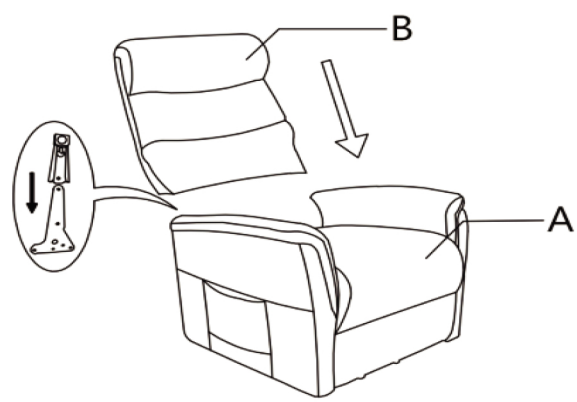

Step 3

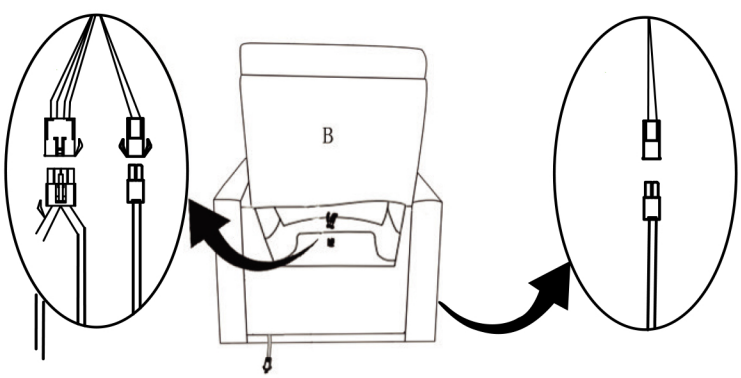

Step 4

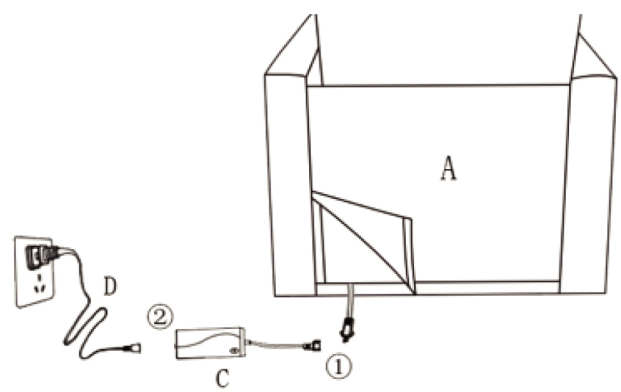

Remote Operation Instruction

①Press the ▽ button, the backrest and footrest will recline.

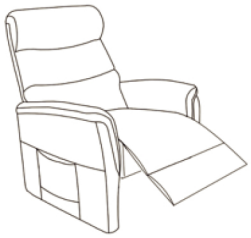

②Press the △ button, the chair will return to its original position and keep pressing the button, the whole chair will lift.

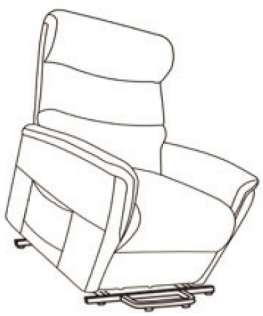

③ Press the ▽ button, the chair back to the original position again.

Warnings

1. Please check was the components of the chair all included and can be used as the 6th tips.
2. Assemble all components according to the instruction correctly before you connect the chair with the power.
3. Please DO NOT sit on the armrests and footrest to eliminate the risk of tipping over.
4. The chair can lift up to 17.7 inches, using carefully to avoid sliding from the chair.
5. If the sofa damaged or doesn't match the website product, please take clear picture and label of the carton to our service team, and we'll help you to solve the problem.
6. If the lift recliner doesn't work , you can try the following measures for self-checking firstly:
   ①. Check all the cable are connected;
   ②. Check if the light of transformer is on.
   ③. The motor will have a weak buzz if those two steps are normally.
   If the chair still doesn't work, please feedback the information to the customer service in time. We will solve the problem for you as soon as possible.
7. Please contact us if you have any question with the product, you can contact us by: