PFISTER

Delton™

Kitchen Faucet

LF-035-3THC Finish*(C)* ❑
LF-035-3THS Finish*(S)* ❑
LF-035-4THC Finish*(C)* ❑
LF-035-4THS Finish*(S)* ❑

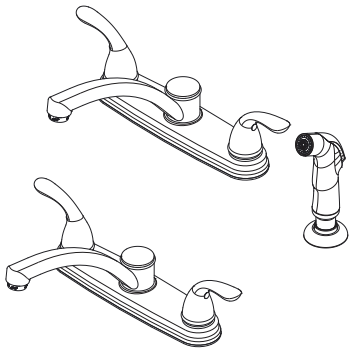

- Single Control
- 2 or 4-Hole Installation
- Pforever Seal

Specifications

Features

- 1.8 GPM Flow Rate
- 2 or 4-Hole Installation
- Swivel Spout
- Includes Matching Side Spray (4TH Only)
- Mounting Hardware included
- Pforever Seal Ceramic Disc Valve
- Pforever Warranty®

Code Compliance

Pfister products are designed and manufactured in compliance with the following standards and codes:

- IAPMO Certified
- CSA B125 Certified
- ASME A112.18.1
- Cal Green Compliant
- NSF 61/9 Annex G (Low lead)
- ADA Compliant-ANSI A117.1 (Lever handles only)

Dimensions

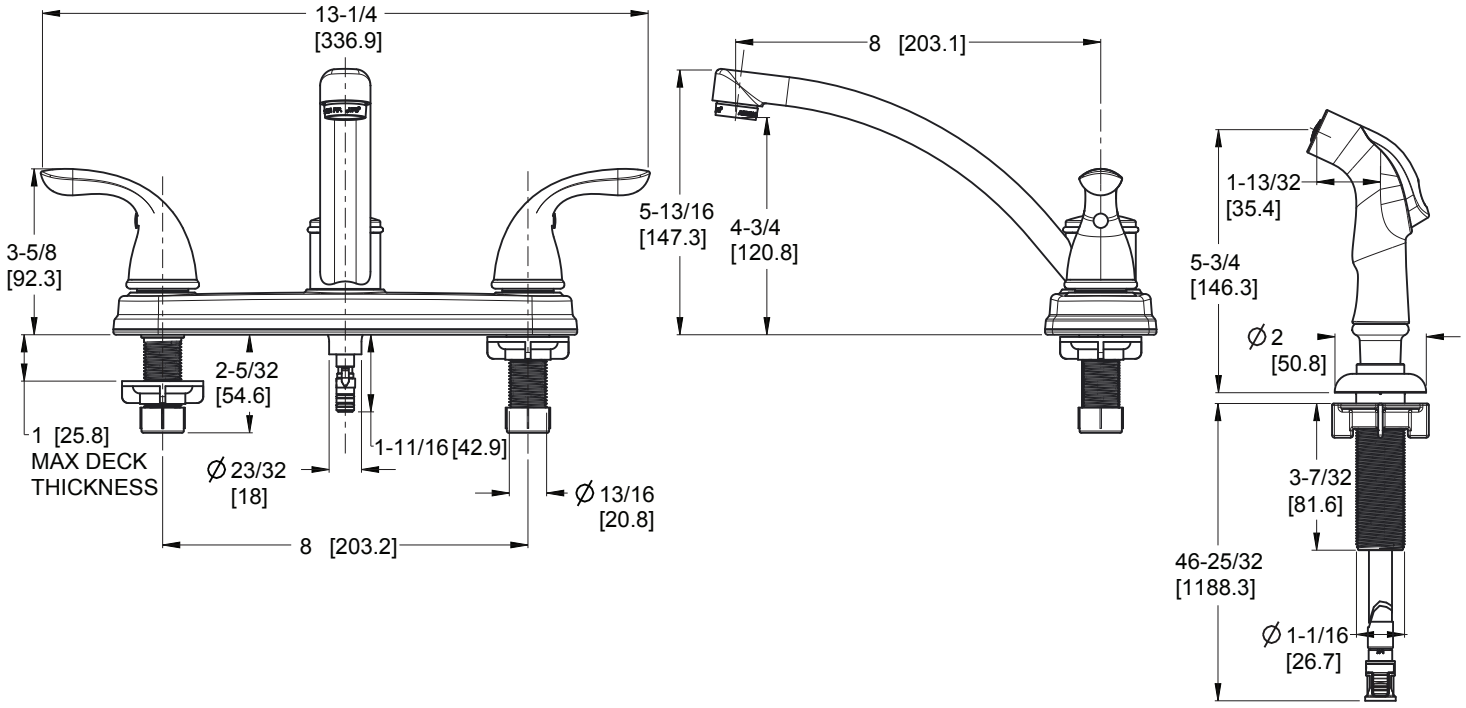

Ø1-3/8 Min to Ø1-1/2 Max. Deck Hole Openings

Copyright © 2015, Pfister Inc.