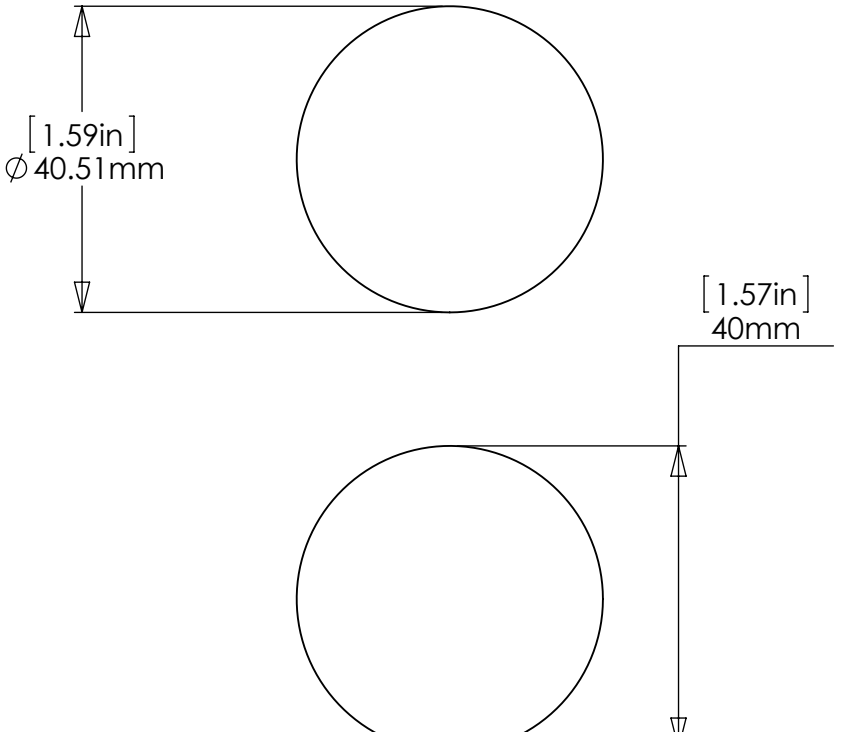
[1.59in]
∅40.51mm
[1.57in]
40mm