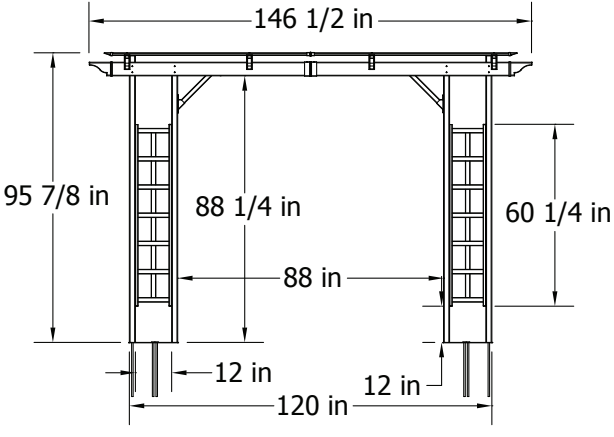
146 1/2 in
95 7/8 in
88 1/4 in
60 1/4 in
88 in
12 in
12 in
120 in

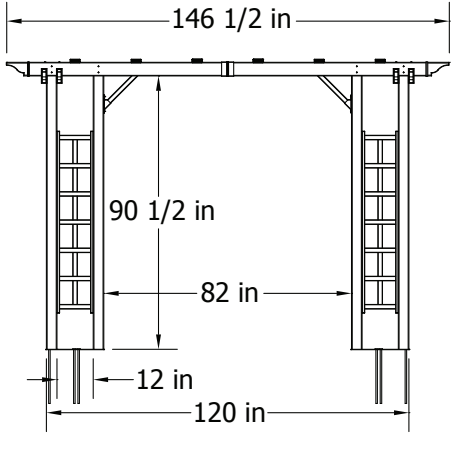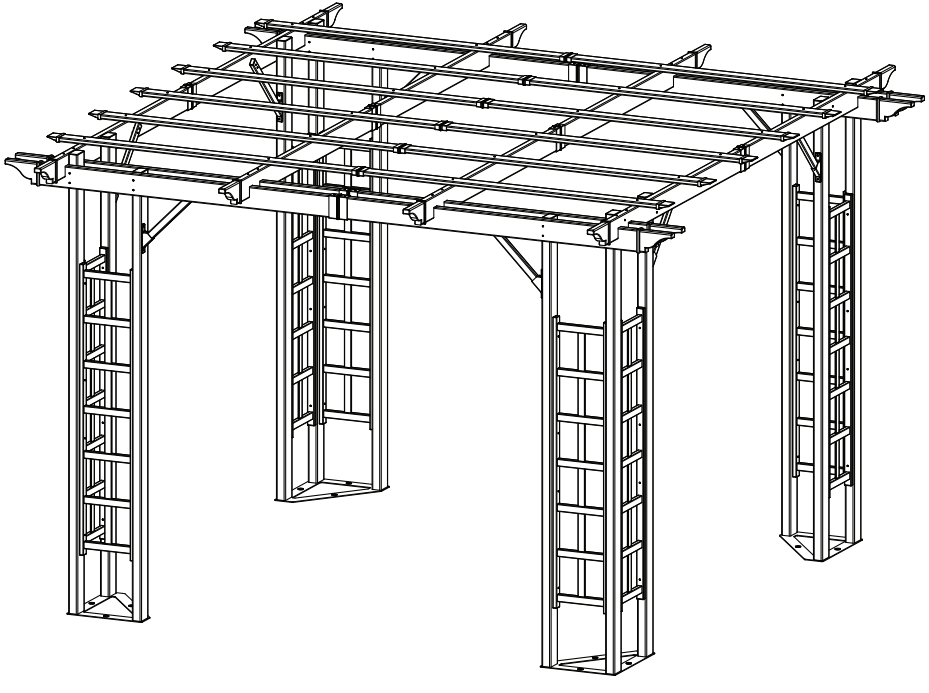
146 1/2 in
90 1/2 in
82 in
12 in
120 in