Deck Mount Clawfoot Tub Filler Faucet With Hand Shower

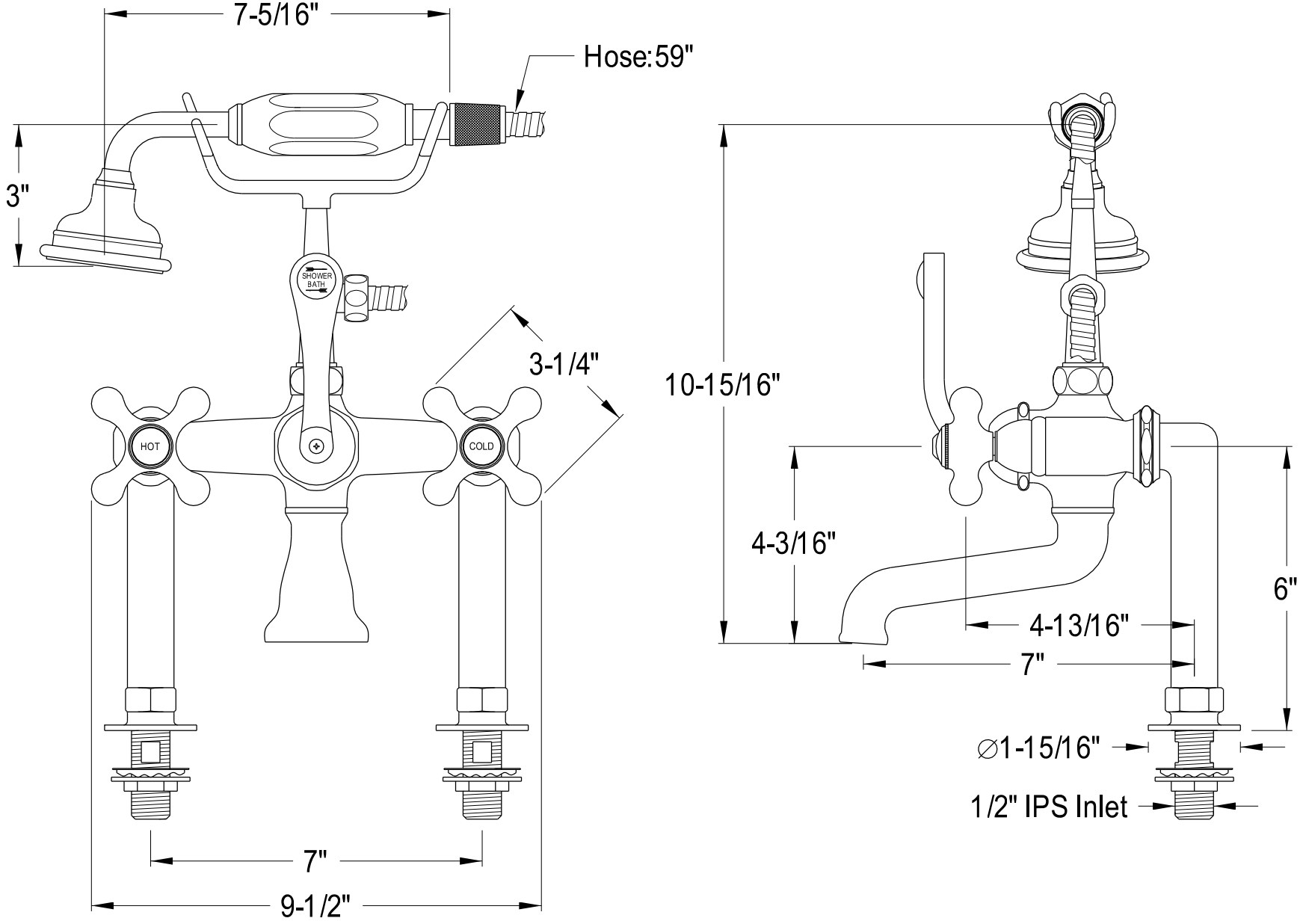

Ref# AE110T1,AE109T2,5,8 | 2015-03-A