MODEL: 93497BL
PACKING DIAGRAM

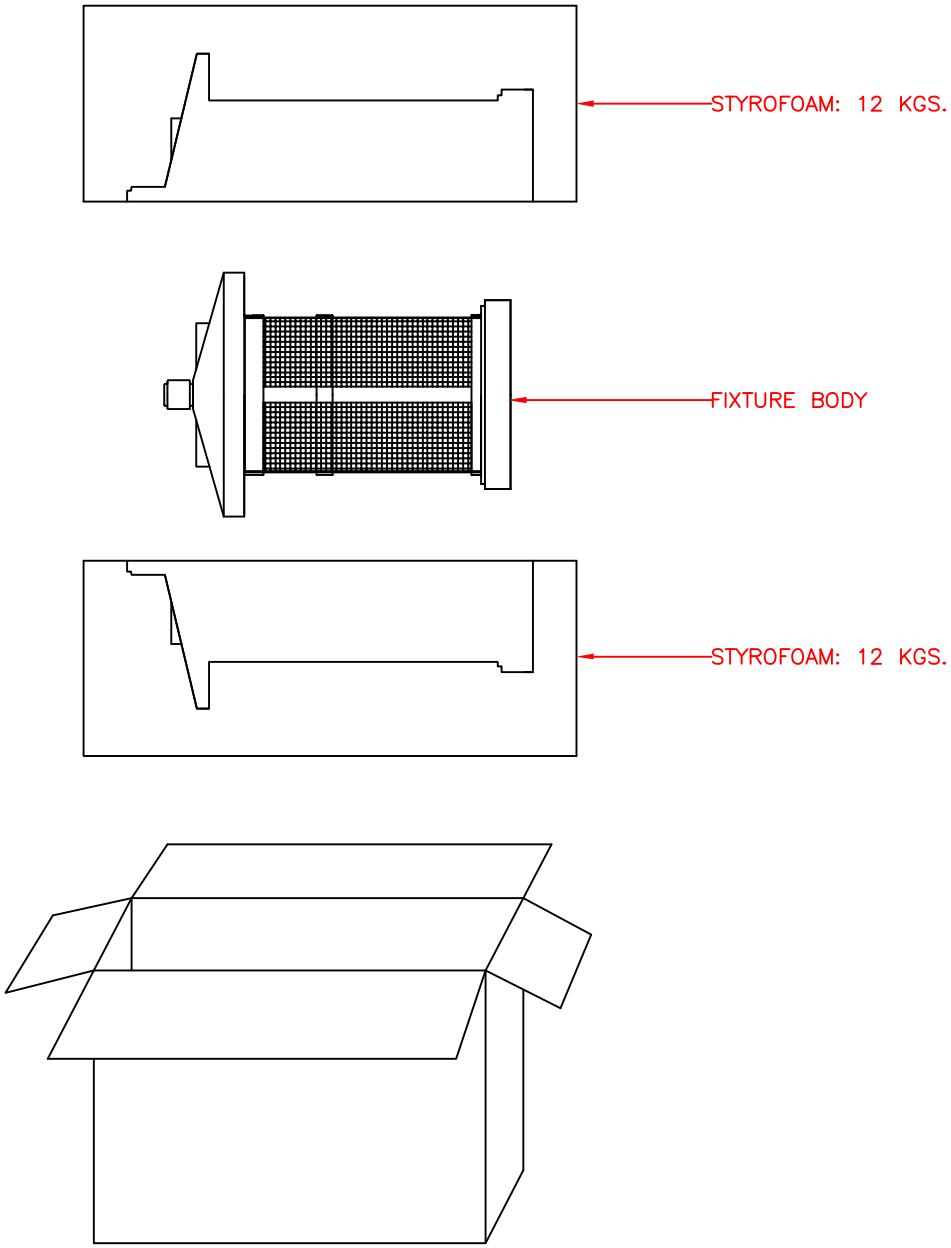

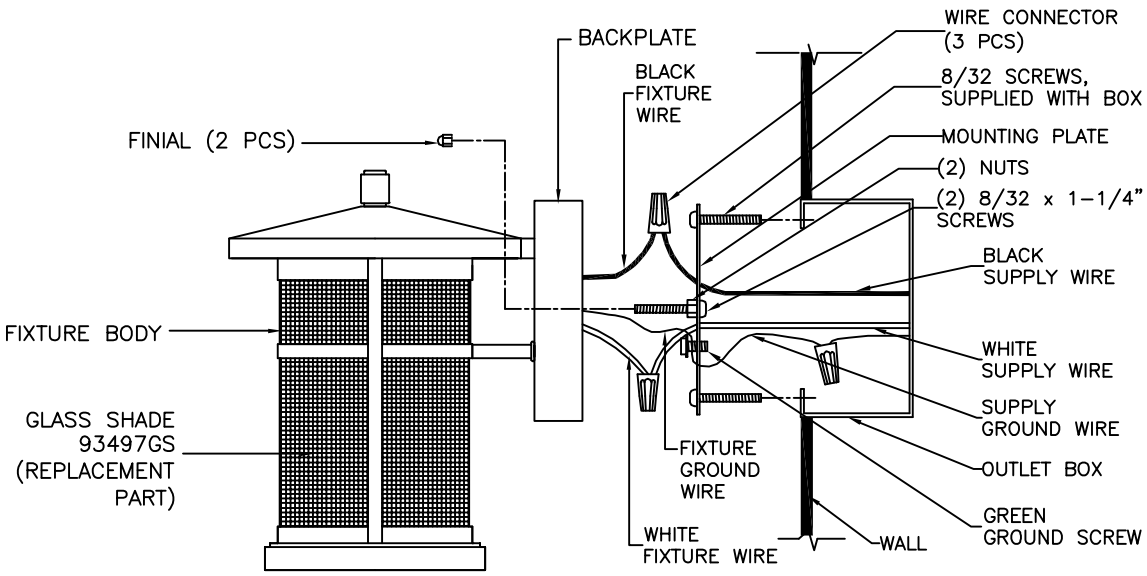

AVAILABLE PART IS:
93497GS (GLASS SHADE)

INSTALLATION INSTRUCTIONS

READ AND SAVE THESE INSTRUCTIONS

READ INSTRUCTIONS ALL THE WAY THROUGH PRIOR TO ASSEMBLY.

MAKE SURE ALL PARTS ARE FIRMLY TIGHTENED.

CAUTION: TO AVOID POSSIBLE ELECTRIC SHOCK, MAKE SURE THE ELECTRICITY IS SHUT OFF AT THE MAIN PANEL. IF YOU ARE REPLACING AN EXISTING FIXTURE, FIRSTLY, TURN THE FIXTURE OFF. NEXT, TURN THE WALL SWITCH OFF. FINALLY, GO TO THE MAIN FUSE OR BREAKER BOX IN YOUR HOME. TURN THE FUSE OR BREAKER TO THE OFF POSITION. SOME TYPES OF FUSES MUST BE UNSCREWED TO SHUT OFF THE POWER.

* ALL WIRING MUST BE DONE IN ACCORDANCE WITH NATIONAL AND LOCAL ELECTRIC CODES.

** IF YOU DO NOT HAVE ELECTRICAL WIRING EXPERIENCE, HAVE YOUR FIXTURE INSTALLED BY A QUALIFIED LICENSED ELECTRICIAN.

*** THIS FIXTURE IS TO BE MOUNTED TO A UL LISTED OUTLET BOX CAPABLE OF SUPPORTING THE WEIGHT OF THIS FIXTURE. THE OUTLET BOX MUST BE DIRECTLY SUPPORTED BY THE BUILDING STRUCTURE.

TOOLS: YOU WILL NEED THE FOLLOWING TOOLS OR EQUIPMENT: SCREWDRIVER, PLIERS, ADJUSTABLE WRENCH.

UNPACK THE FIXTURE

YOU SHOULD HAVE RECEIVED THE FOLLOWING PARTS IN THE PACKAGE: FIXTURE BODY, TO PROTECT THE FINISH, PLACE ALL PARTS ON A SOFT SURFACE.

HARDWARE PACK: (2) 8-32 x 1-1/4" SCREWS AND (3) WIRE CONNECTORS.

INSTALL THE FIXTURE

1. REMOVE MOUNTING PLATE FROM BACK OF THE BACKPLATE BY UNSCREWING (2) FINIALS.

2. ATTACH MOUNTING PLATE TO OUTLET BOX USING TWO SCREWS PROVIDED WITH THE OUTLET BOX. (NOTE: IF THE SCREWS WITH THE OUTLET BOX ARE TOO SHORT, USE THE (2) 8-32 x 1-1/4" SCREWS PROVIDED IN THE MOUNTING HARDWARE PACKAGE).

3. CONNECT THE WHITE OR RIBBED FIXTURE WIRE TO THE WHITE SUPPLY WIRE IN THE OUTLET BOX USING THE TWIST-ON WIRE CONNECTOR PROVIDED. CONNECT THE BLACK OR SMOOTH FIXTURE WIRE TO THE BLACK SUPPLY WIRE IN THE SAME MANNER. INSTALL THE FIXTURE GROUND WIRE UNDER THE GREEN GROUND SCREW ON THE MOUNTING PLATE THEN CONNECT THE FIXTURE GROUND WIRE TO THE SUPPLY GROUND WIRE IN THE OUTLET BOX USING THE TWIST-ON WIRE CONNECTOR PROVIDED.

4. RAISE BACKPLATE ASSEMBLY TO THE WALL AND CAREFULLY TUCK THE WIRES INSIDE THE OUTLET BOX. SPREAD THE ELECTRICAL SPLICES SO THAT THE BLACK WIRES ARE ON ONE SIDE OF THE OUTLET BOX AND THE WHITE WIRES ARE ON THE OTHER SIDE. LINE UP SCREWS WITH HOLES IN BACKPLATE AND SECURE WITH (2) FINIALS.

7. PRIOR TO INSTALLING THE BULB, PLEASE INSPECT SOCKET FOR SILICA PACKET. IF PACKET IS PRESENT, REMOVE AND THROW AWAY. DO NOT EXPOSE TO CHILDREN AND PETS.

8. INSTALL A 120V, 60HZ, 60 WATT MAX. MEDIUM BASE TYPE "A" BULB (NOT INCLUDED) INTO SOCKET.

9. RESTORE POWER, YOUR NEW FIXTURE IS NOW READY FOR USE.