BOSCONI

VANITIES

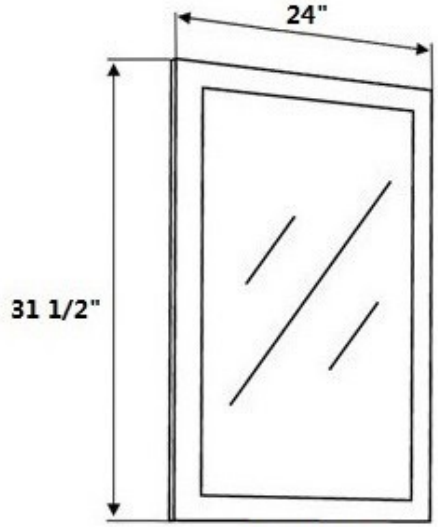

MIRROR

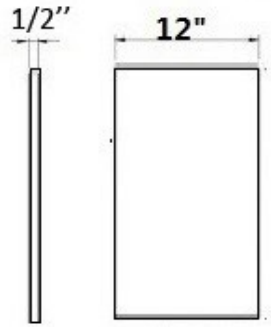

SIDE CABINET TOP

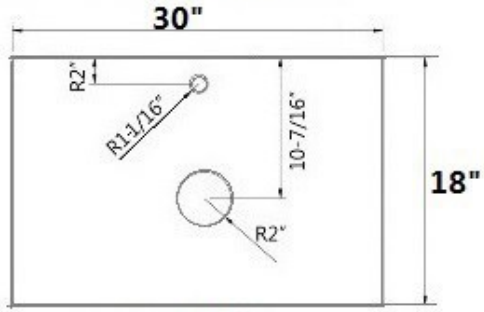

TOP

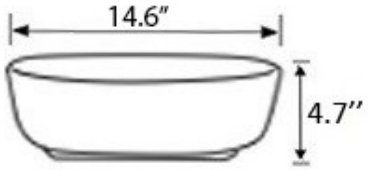

SINK

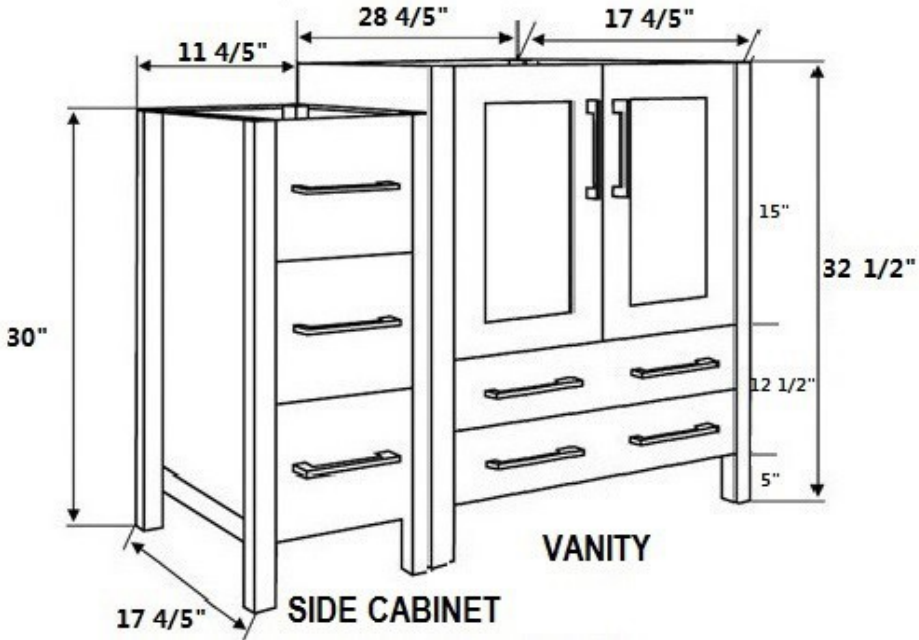

VANITY

SIDE CABINET