BELLATERRA HOME

MODEL: BT100-37R-GA-WMO

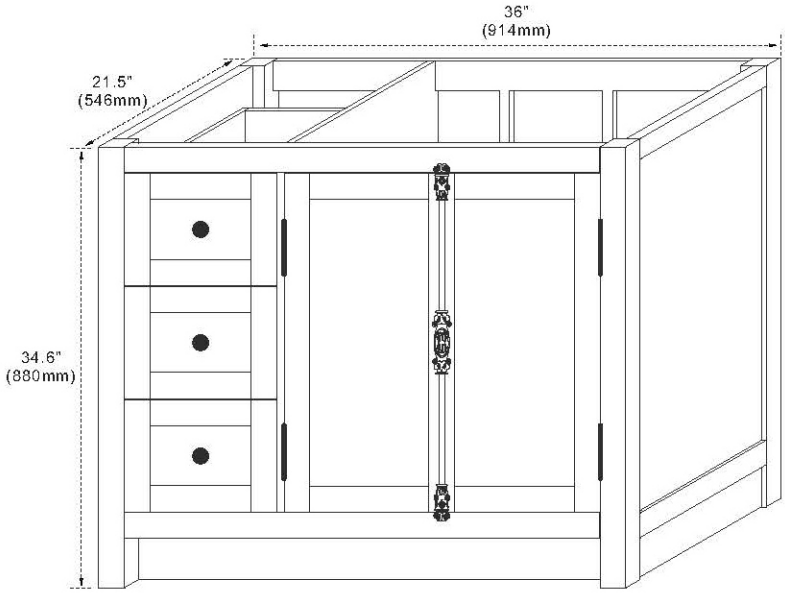

Features
1. Solid wood and Ash veneered plywood;
2. Two doors with long interlock handle;
3. Interior shelf adjustable;
4. Three soft closing drawers with dovetail construction;
5. Ceramic sink on right side gives more counter space for storage;

Colors / Finishes
GYA - Grey Ash;
BA - Brown Ash;
GA - Glacier Ash;

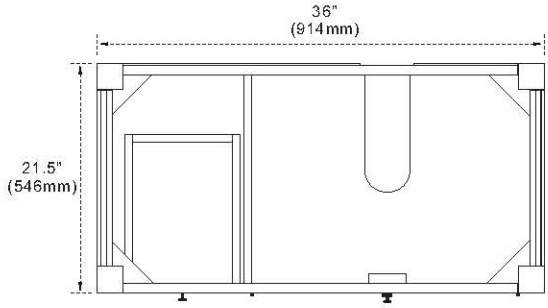

Top view

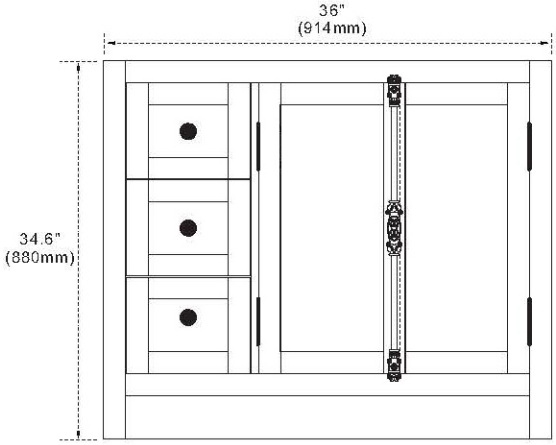

Front view

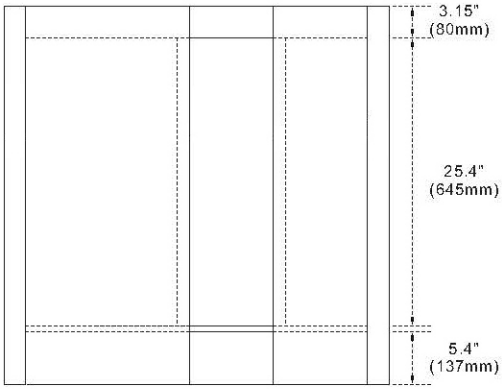

Back view

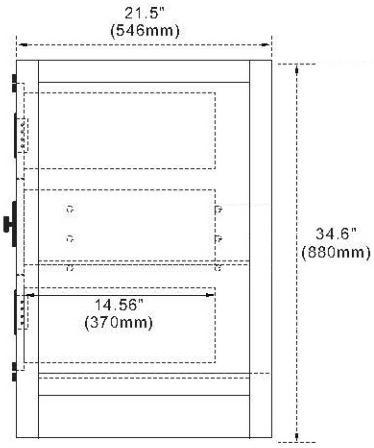

Side view

NOTE: SINK STYLE, SHAPE, FAUCET HOLES, CUTOUT ON TOP, VANITY MAY VARY FROM THE PICTURE ABOVE. INSTRUCTIONAL PURPOSE ONLY.

Professional installation is recommended.

www.bellaterra-home.com

Bellaterra Home LLC, All Rights Reserved 2019

BELLATERRA HOME

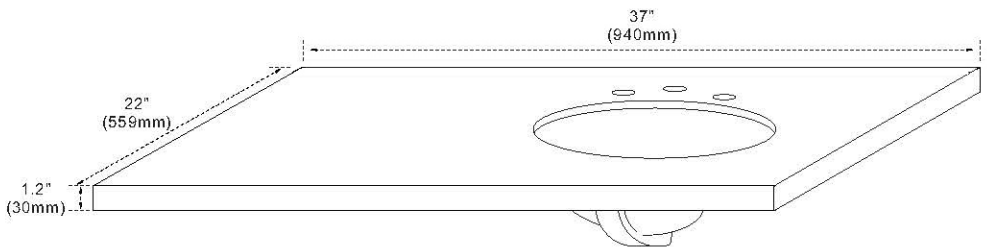

Features
1. Single 18" oval undermount sink cutout;
2. 8" wide spread faucet holes;
3. Thickness laminated to 1.2";
4. Ceramic sink on right side of countertop;

Colors / Finishes
WM - Natural White Carrara marble;
BG - Natural Black Galaxy Granite;
GY - Natural Grey Granite;
WE - White Engineer Stone;

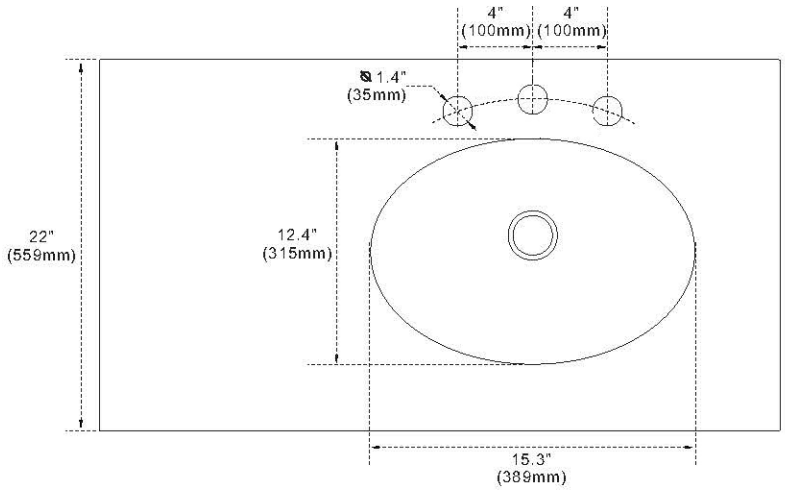

Top view

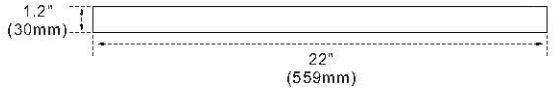

Side view

NOTE: SINK STYLE, SHAPE, FAUCET HOLES, CUTOUT ON TOP, VANITY MAY VARY FROM THE PICTURE ABOVE. INSTRUCTIONAL PURPOSE ONLY.

Professional installation is recommended.

www.bellaterra-home.com

Bellaterra Home LLC, All Rights Reserved 2019