Models 15A-3000 & 15A3100

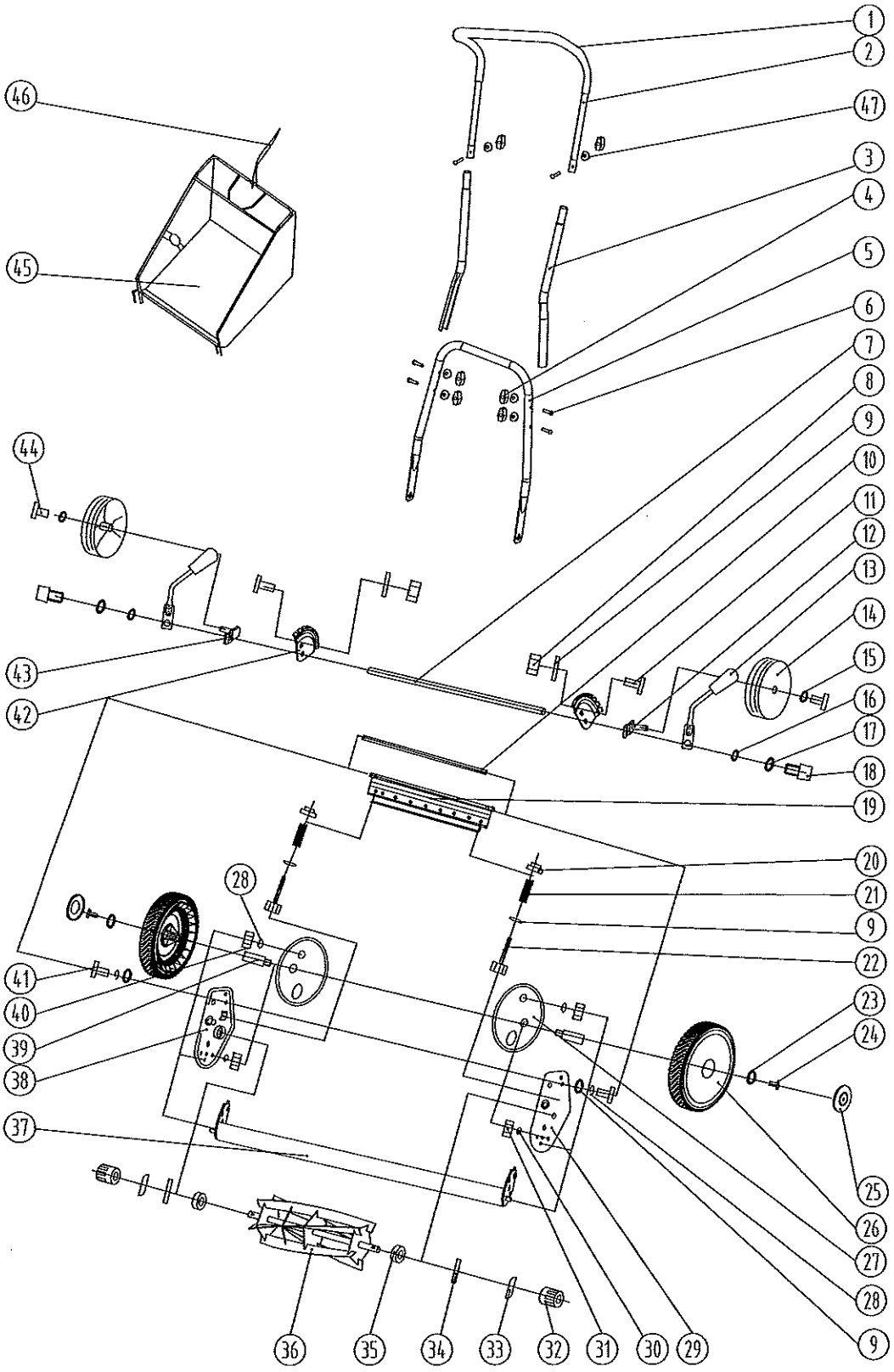

Ref.	Part Number	Description
1	720-04167	Grip, Handle, 26 x 16 x 630
2	749-04811	Handle, Upper
3	749-04812	Handle, Middle
4	720-04169	Knob, Orange
5	749-04813	Handle, Lower (Model 3000)
5	749-04814	Handle, Lower (Model 3100)
6	710-05321	Bolt, M6 x 35gb/T12
7	711-05531	Shaft, Rear, Black (Model 3000)
7	711-05533	Shaft, Rear, Black (Model 3100)
8	712-04292	Nut, M8, Gb/T6172.2
9	736-04563	Washer, 17 x 8.2 x 1.2
10	711-05534	Pin, (Model 3000)
10	711-05535	Pin, (Model 3100)
11	710-05322	Screw, M8-16gbt70.2
12	787-01986	Bracket, Rear, LH, Black
13	787-02085	Handle, Adjustment, RH, Orange
	787-02084	Handle, Adjustment, LH, Orange
14	734-04605	Wheel, Rear
15	736-04564	Washer, 17 x 8.2 x 1.2
16	736-04565	Washer, Gb/T955
17	736-04566	Washer, 20 x 13 x 1
18	710-05323	Bolt, M8 x 24
19	787-01965	Bracket, Lower Blade, Black (Model 3000)
19	787-01967	Bracket, Lower Blade, Black (Model 3100)
20	712-04293	Nut, M8 x 1
21	732-04854	Spacer, 65mm, 17 x 4 x 48

Ref.	Part Number	Description
22	710-05324	Bolt, M8 x 1 x 65
23	736-04567	Washer, 25 x 6.5 x 1.5
24	710-05325	Bolt, M6x20, Gb/T5780
25	731-08254	Hub Cap
26	734-04607	Wheel, Complete
27	787-01969	Bracket, Black
28	736-04568	Washer, Spacer, Gb/T7244
29	787-01973	Bracket, Support, LH, Black
30	736-04569	Washer, 20x10.2x1.4
31	712-04294	Nut, M10, Gb/T6172.2
32	717-04917	Gear, 41mm, Pa66
33	787-01976	Support, 19 x 10 x 5
34	736-04570	Washer, 34 x 15.5 x 1
35	741-04514	Bearing, 6002z
36	742-04362	Blade, Roller (Model 3000)
36	742-04363	Blade, Roller (Model 3100)
37	787-01978	Shield, Deflector (Model 3000)
37	787-01980	Shield, Deflector (Model 3100)
38	787-01982	Bracket, Support, RH, Black
39	711-05536	Axle, Wheel, 19x65.5
40	712-04295	Nut, M8, Gb/T6170
41	710-05326	Bolt, M8x16gb/T5781
42	787-02083	Bracket, Adjustment, 9 Tooth
43	787-01988	Bracket, Rear, RH, Black
44	710-05327	Bolt, M6x10 Gb/T5780
45	764-04133	Grass Bag (Model 3100)
46	727-04374	Strap, Grass Bag (Model 3100)
47	736-04573	Saddle Washer