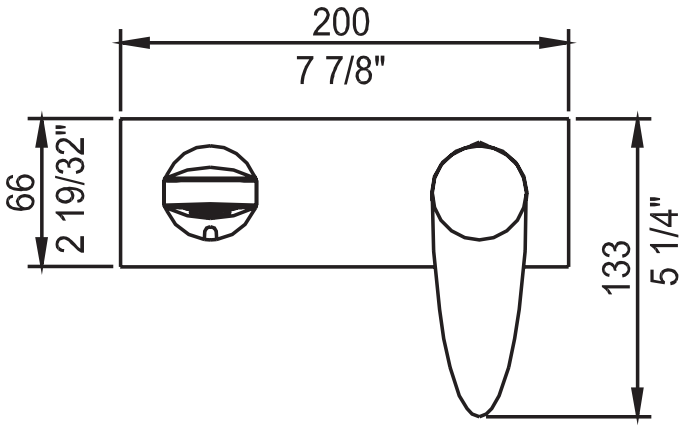
200
7 7/8"
66
2 19/32"
133
5 1/4"

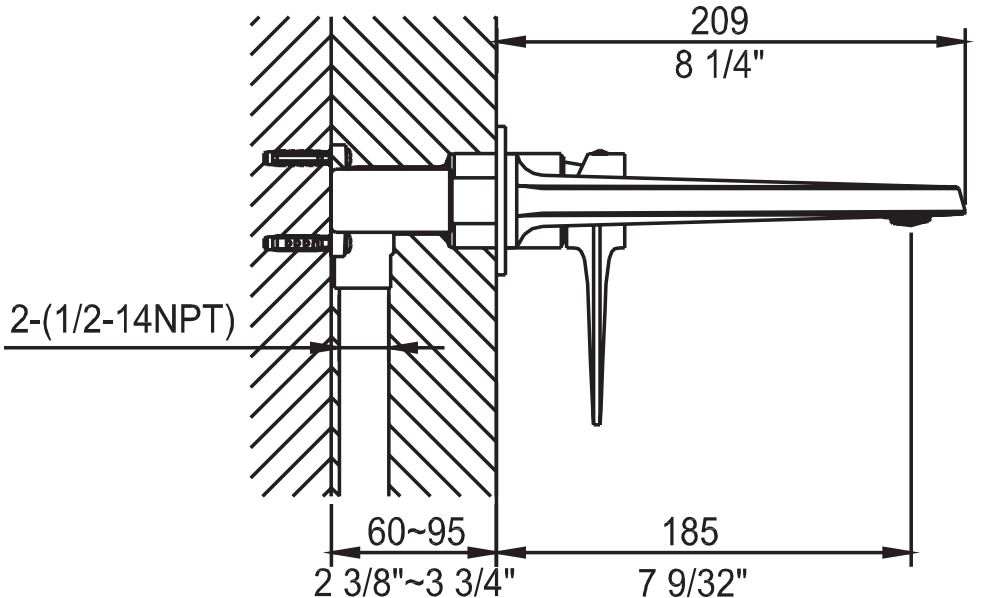
209
8 1/4"
2-(1/2-14NPT)
60~95
2 3/8"~3 3/4"
185
7 9/32"