Vinnova Modena Vanity Collection 756036-WH-BG-NM

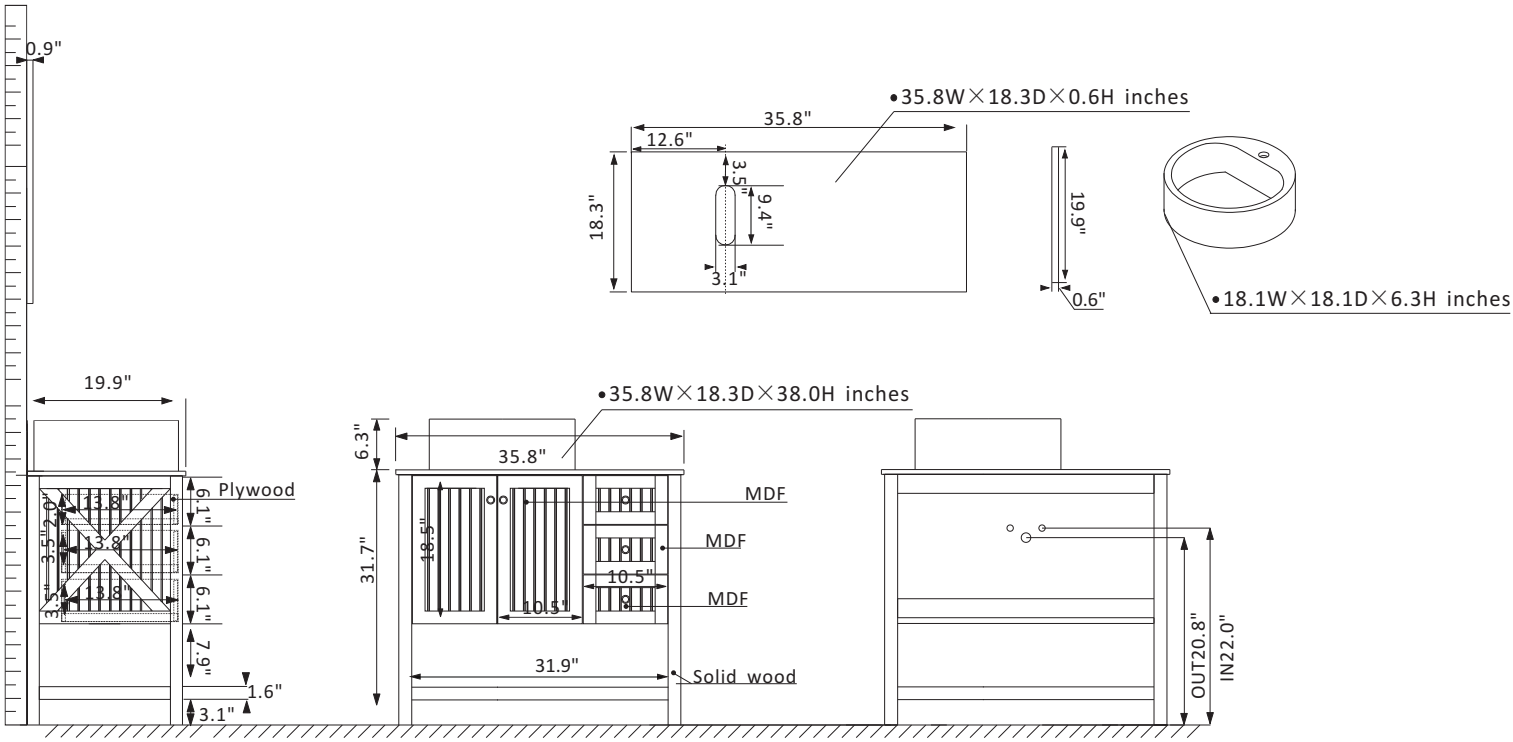

Features

- Sturdy solid-oak/wood veneer construction
- Available in White and Grey finish
- Available with Dark Black glass top
- Single raised, round sink
- 1-hole faucet mount
- Two Soft-closing doors
- Two in one roomy Soft-Closing drawer and 1 Soft-Closing drawers
- Striking satn nickel-finish hardware
- Easy plumbing and faucet installaton*

* Does not include faucet, drain assembly, or P-trap

VINNOVA
FASHION BATHROOM LIFE