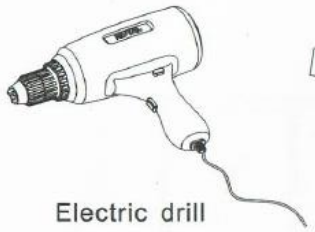

Electric drill

Silicone

Tape measure
(3m-5m)

Drill bit
(Φ8)

Pencil

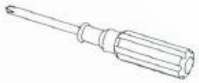

Screwdriver

Tools required for installation

Installation Guide

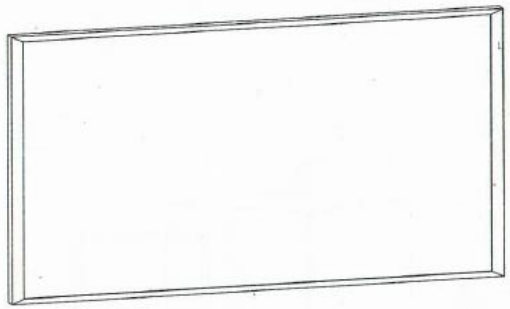

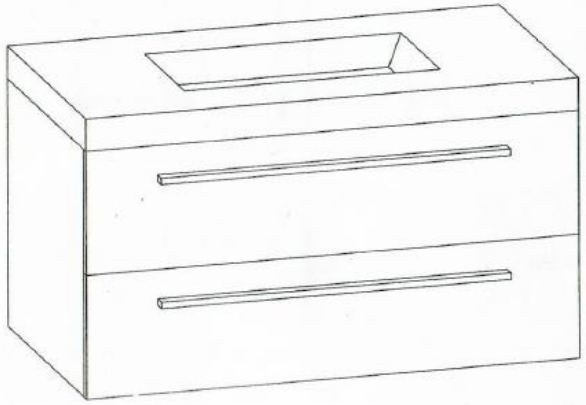

3

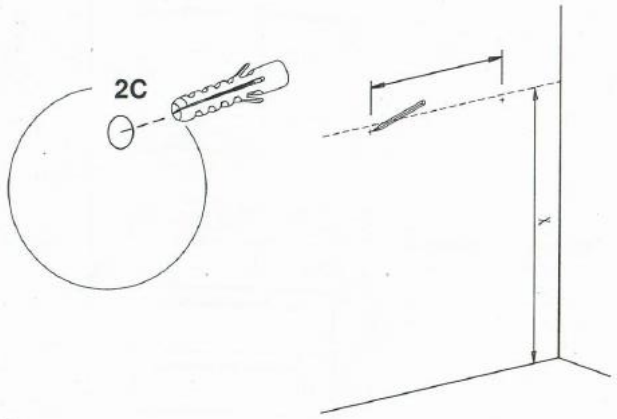

4

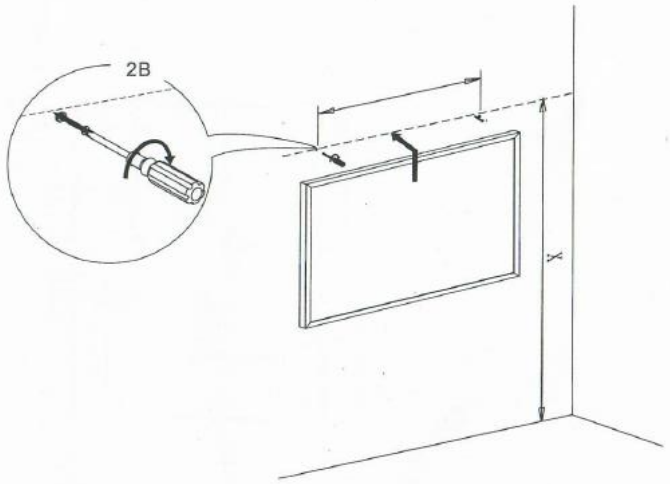

MIRROR

2B

2C

1

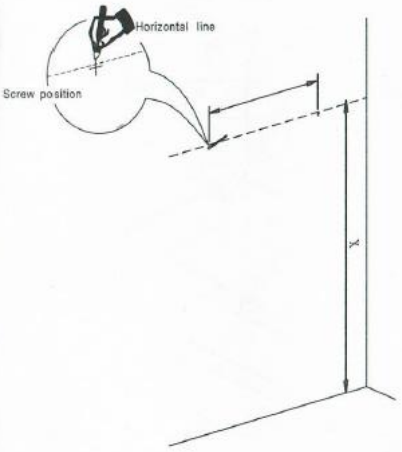

2

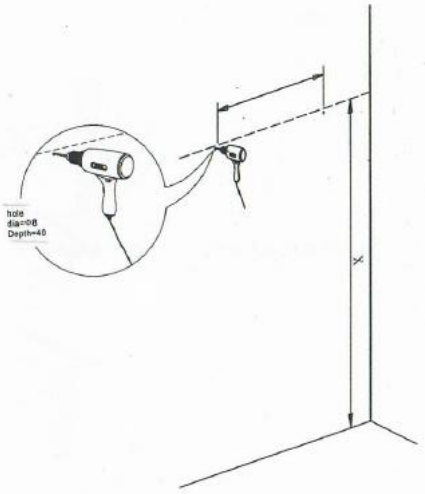

WOOD MIRROR

6B

6C

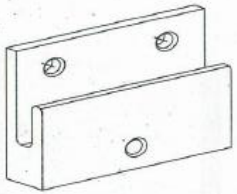

2D

1

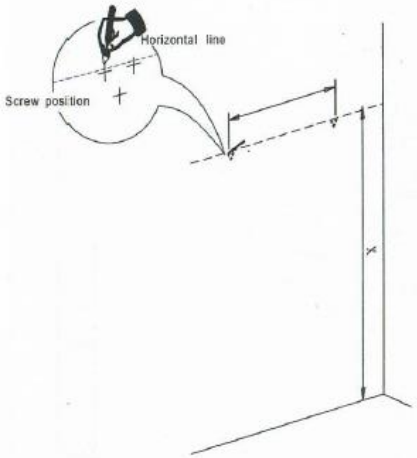

2

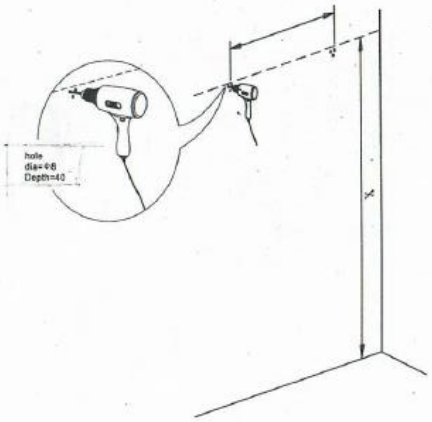

3

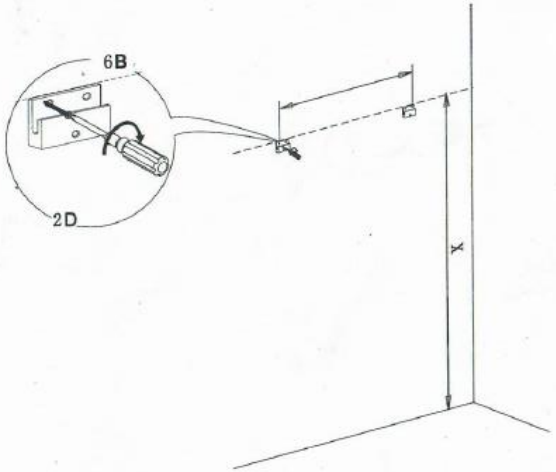

4

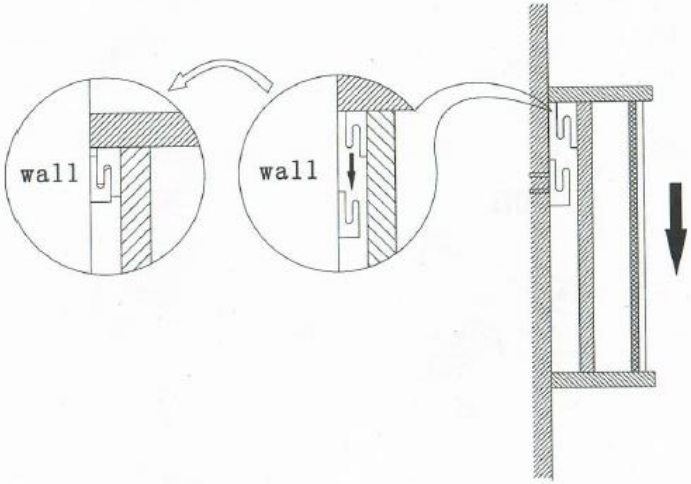

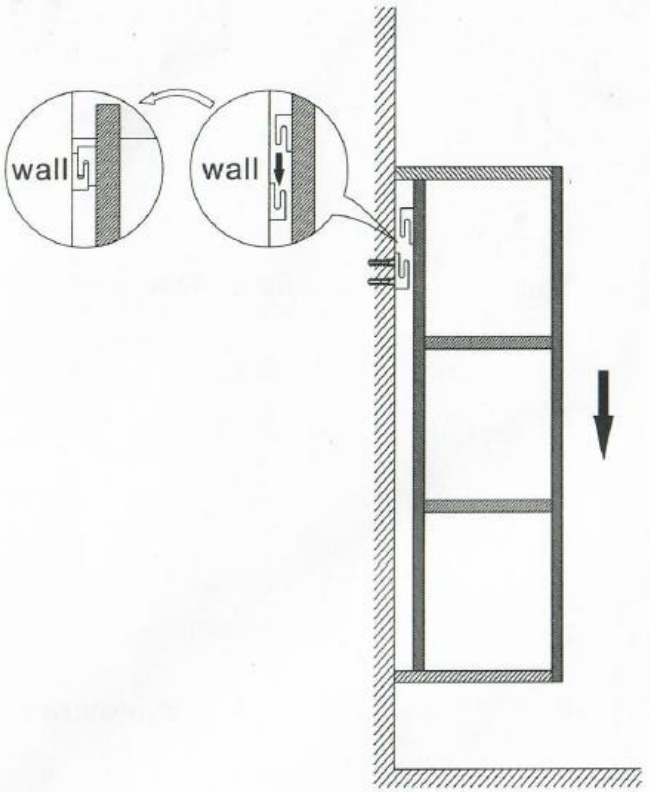

If there is a minor superfical adjustmentin the product, this will not be noted in the instructions.

STORAGE
(Select)

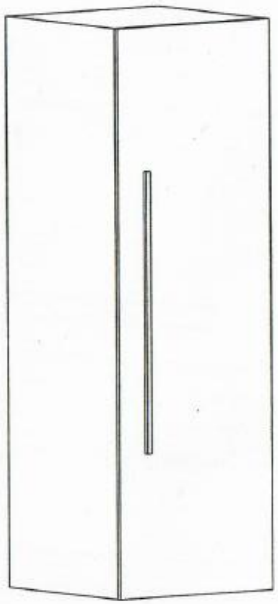

CABINET

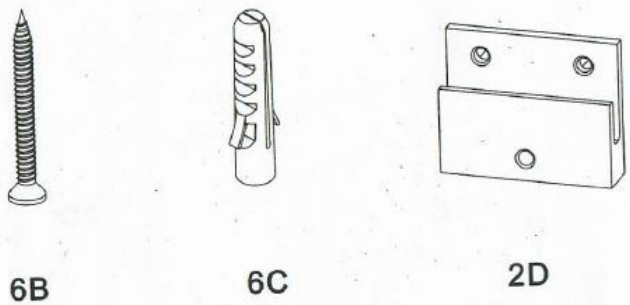
6B
6C
2D

1

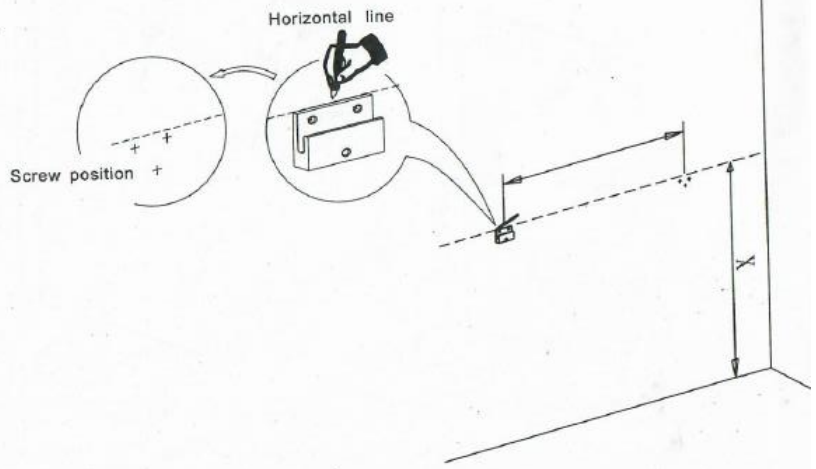
Horizontal line
Screw position
X

2

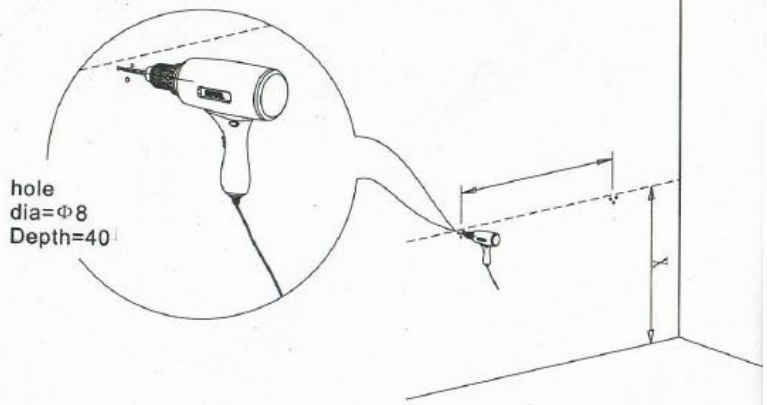
hole
dia=Φ8
Depth=40
X

3

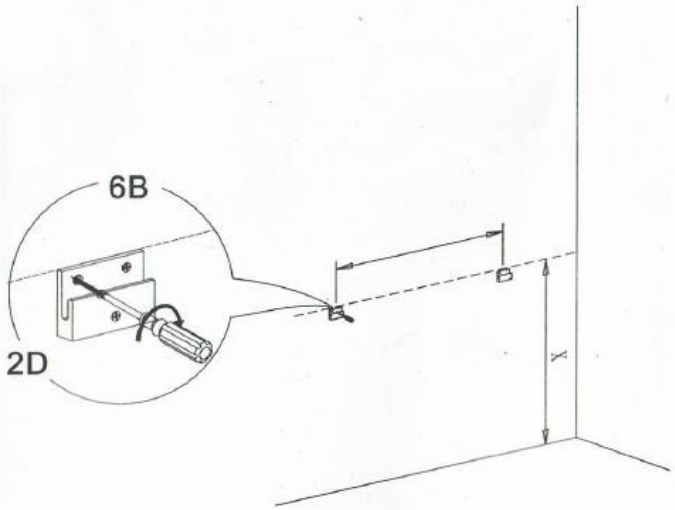
6B
2D
X

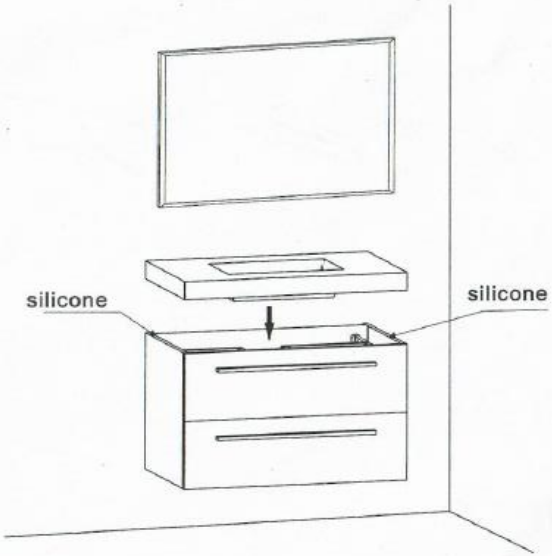
silicone
silicone

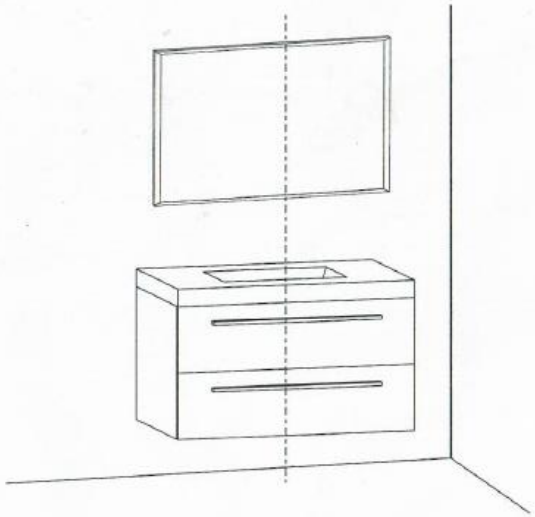

4

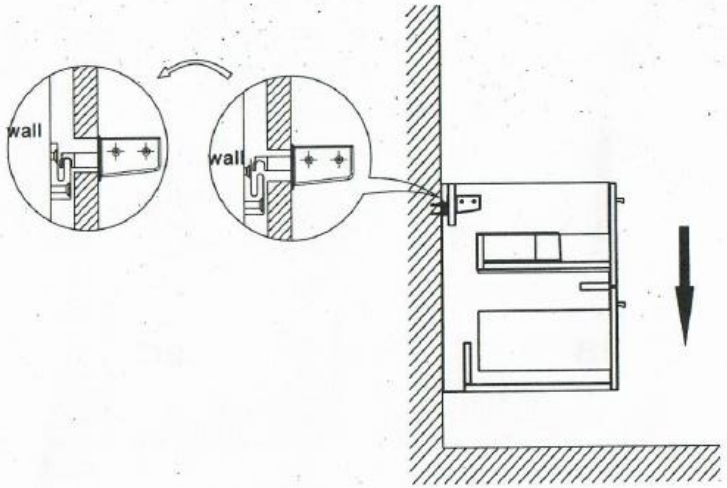
wall
wall

5

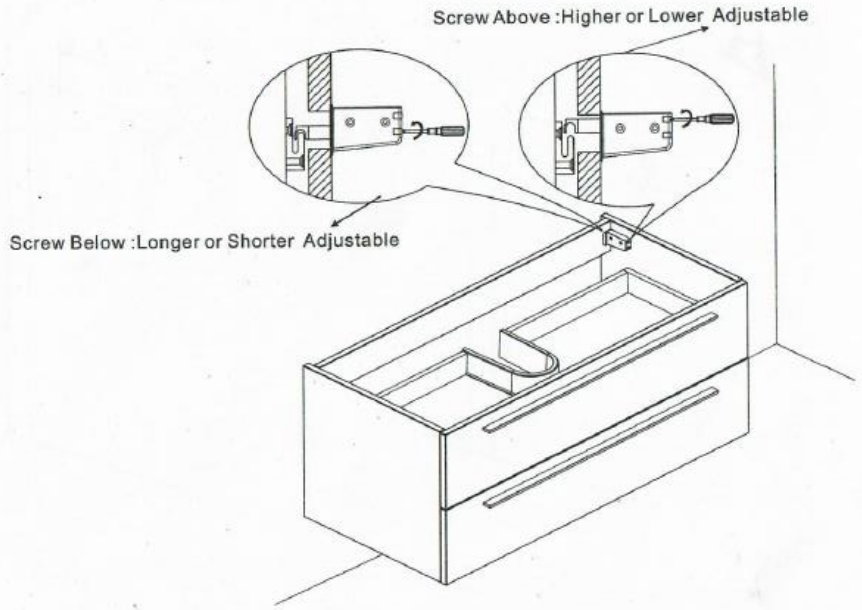
Screw Above :Higher or Lower Adjustable
Screw Below :Longer or Shorter Adjustable