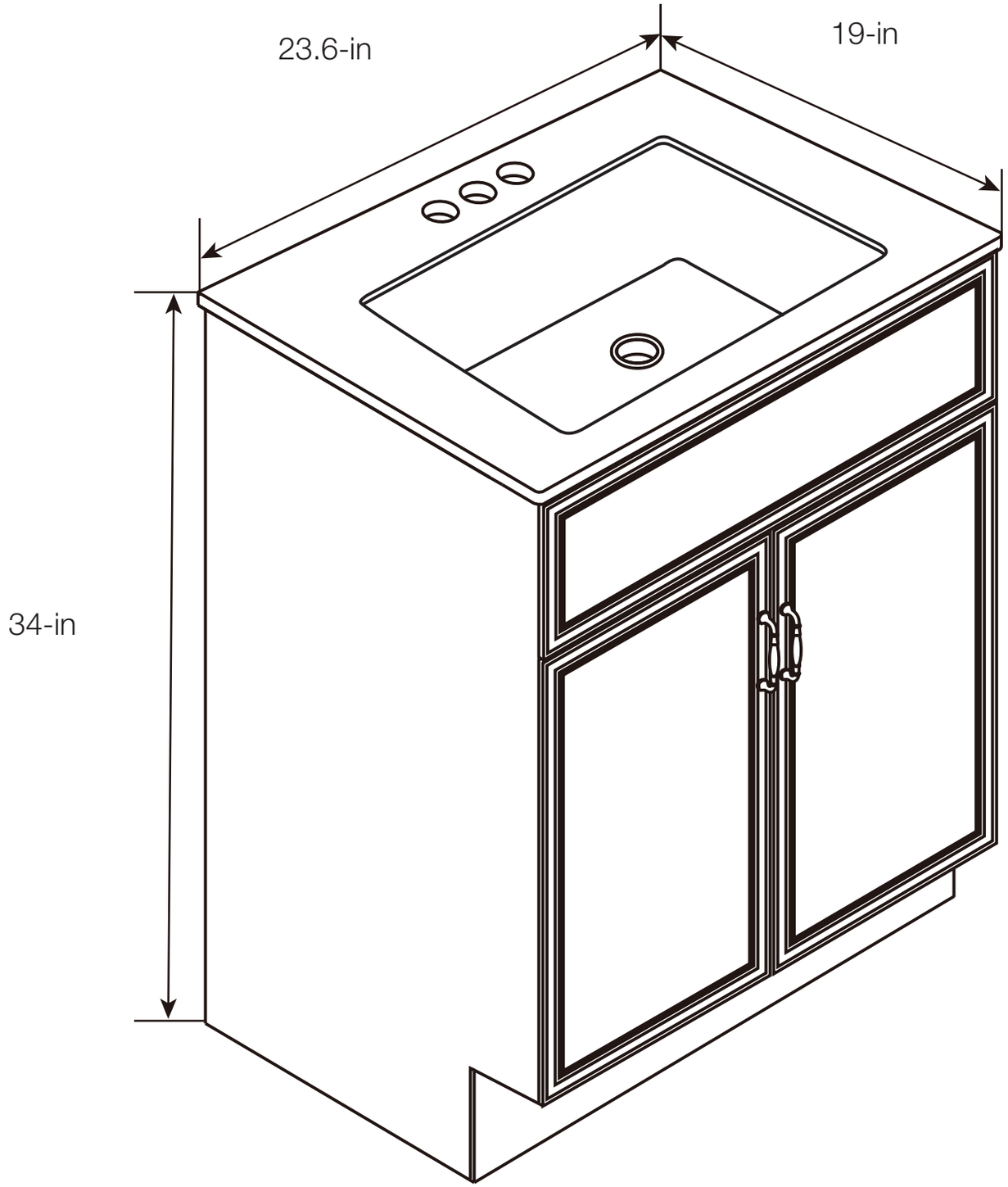
23.6-in
19-in
34-in

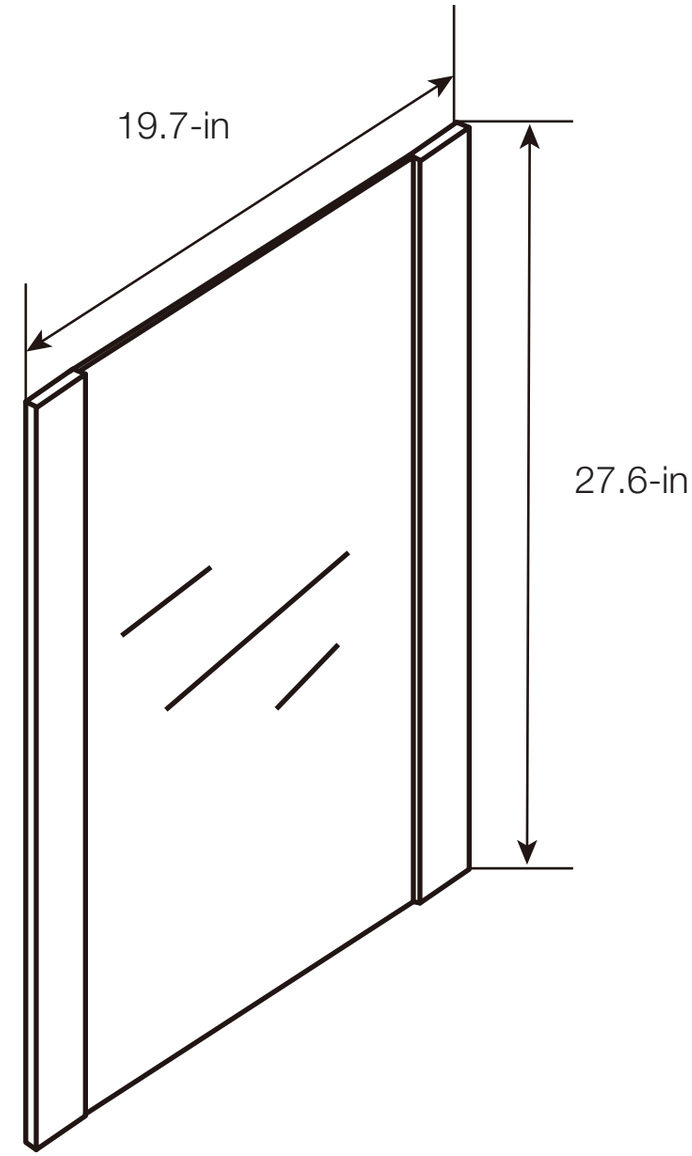
19.7-in
27.6-in