PFISTER

Marielle™

Mini Widespread Lavatory Faucet

LG46-MOBC Finish*(C)* ❑
LG46-MOBD Finish*(D)* ❑
LG46-MOBK Finish*(K)* ❑
LG46-MOBY Finish*(Y)* ❑

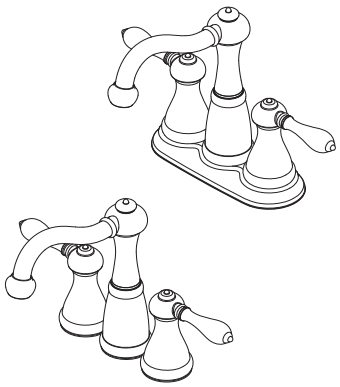

- 3-Hole Installation
- Solid Brass Construction

Specifications

Features

- 1.2 GPM Flow Rate
- Fixed Underbody
- Solid Brass Construction
- Includes Metal Supply Nuts
- Accommodates Up to 2" Deck Thickness
- 3-Hole Installation
- 4" Centerset and Mini Widespread Combination
- Metal Lever Handles
- Mounting Hardware Included
- Install With or Without Deck Plate
- Metal Pop-Up
- High-Arc Decorative Spout
- Pforever Seal Ceramic Disc Valve
- Pforever Warranty®

Code Compliance

Pfister products are designed and manufactured in compliance with the following standards and codes:

- IAPMO Certified
- CSA B125 Certified
- ASME A112.18.1
- NSF 61/9 Annex G (Low lead)
- Cal Green Compliant
- CEC Compliant
- EPA WaterSense Certification 1.2 gpm, 4.5L/Min ADA Compliant-ANSI A117.1 (Lever handles only)

Dimensions

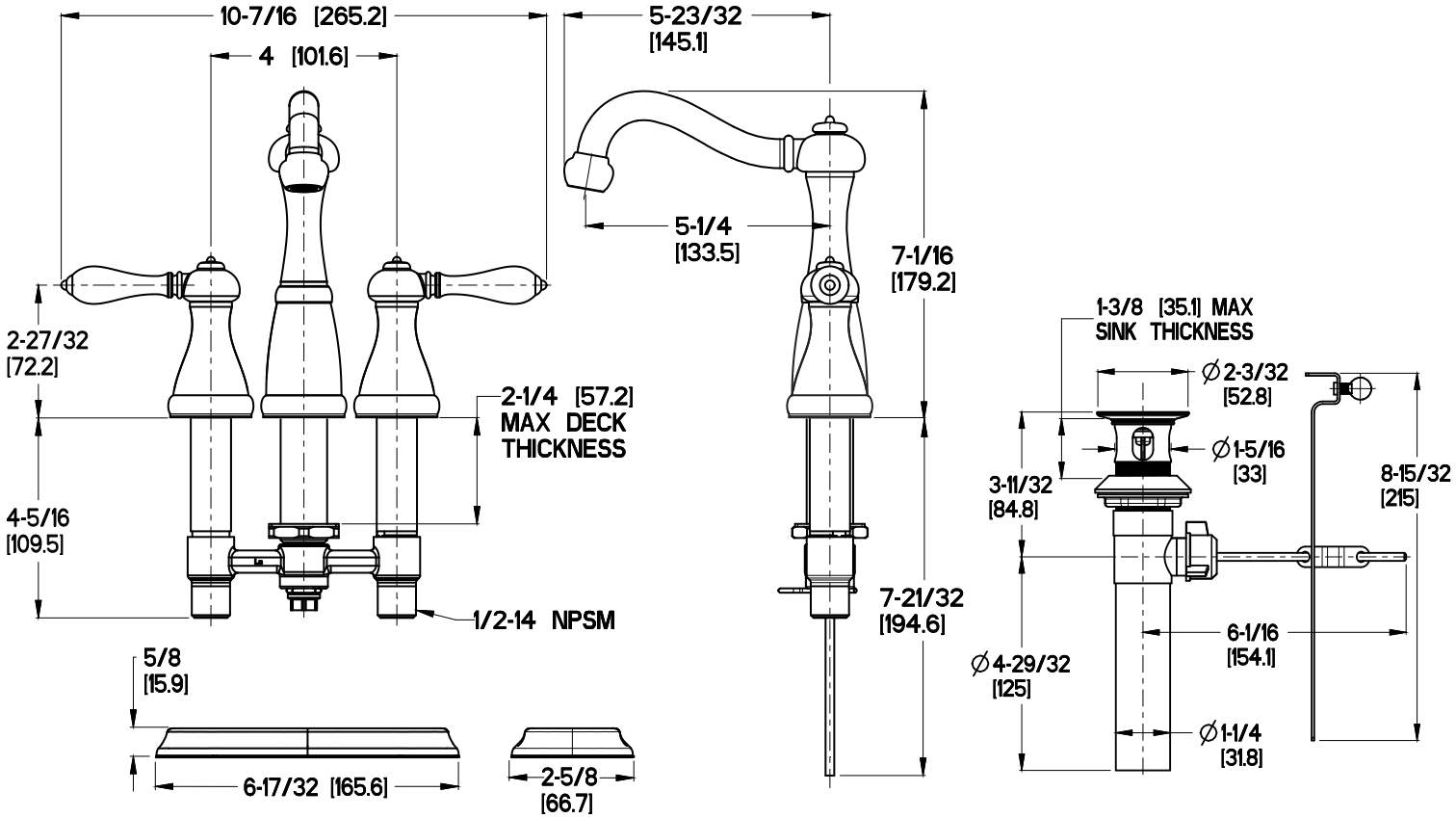

Optional Deckplate

Metal Pop-Up

Ø1 Min to Ø1-1/2 Max. Deck Hole Openings

Copyright © 2016, Pfister Inc.