USL

SK19089ABR1

STANTON BENCH AND MIRROR

ASSEMBLY INSTRUCTIONS

Made In China

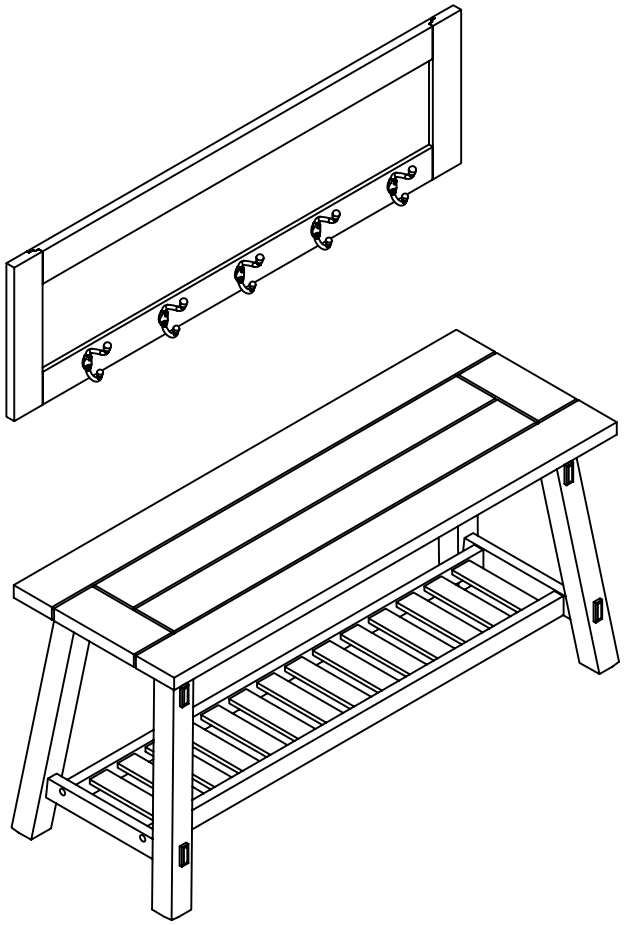

Thank you for purchasing this quality product. Be sure to check all packing material carefully for small parts, which may have came loose inside the carton during shipment. Count all parts and material hardware, then compare with parts list to be sure all parts are present, If any parts are missing or damaged, phone, fax, or mail to our Customer service Department for efficient and speedy service. Please indicate the model number and code letter of part(s) needed.

IMPORTANT NOTE: Follow instructions listed below in proper sequence as numbered to assure fast,easy and correct assembly.

PARTS LIST		
A 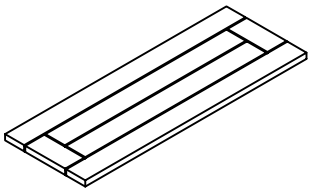 TOP PANEL-1PC	B 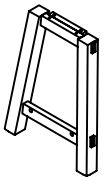 SIDE FRAME-2PCS	C 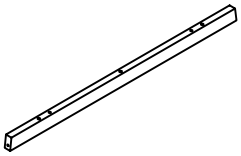 CROSS BRACE-2PCS
D 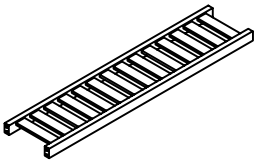 BOTTOM PANEL-1PC	E 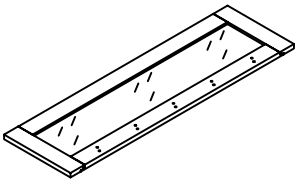 MIRROR-1PC	

a WOOD DOWEL-12PCS	b 1-1/4"L FLAT HEAD SCREW-4PCS	c 1-1/2"L FLAT HEAD SCREW-2PCS
d BOLT-14PCS	e SPRING WASHER-4PCS	f WASHER-4PCS
g WRENCH-1PC	h POTHOOK-5PCS	i 1/2" FLAT HEAD SCREW-10PCS
j ANCHOR-2PCS	k WOOD PLUG-4PCS	

NOTE:THE SURFACE WITH THE STICKER IS THE BACK SIDE

FIG 1

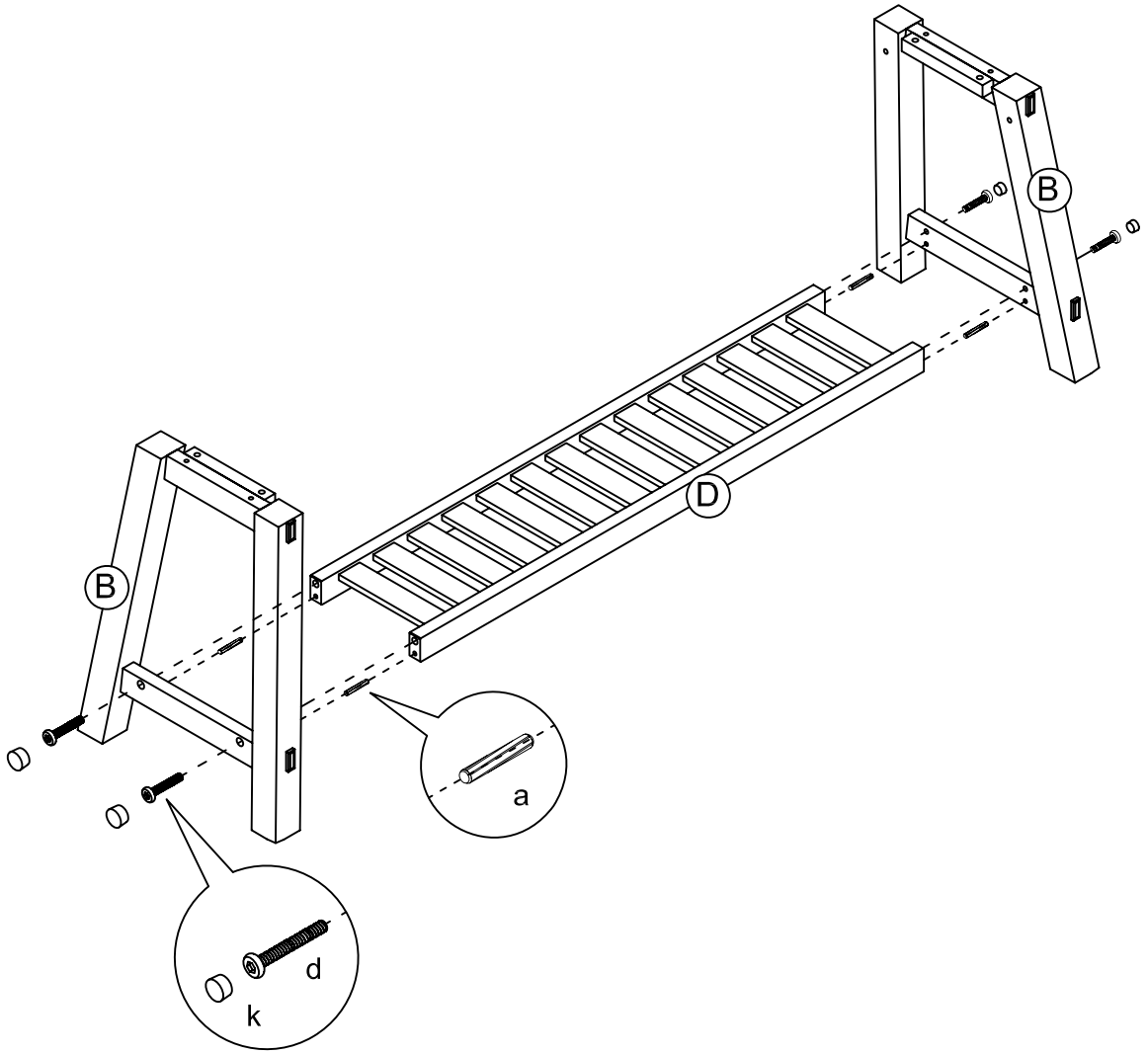

FIG 2

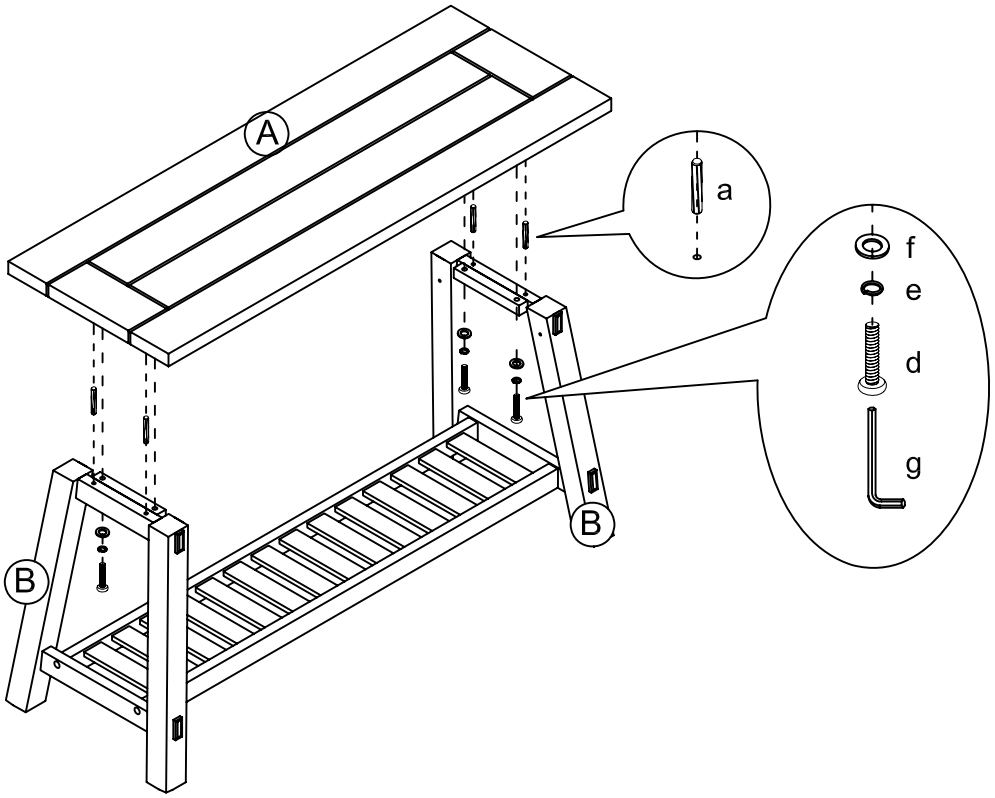

FIG 3

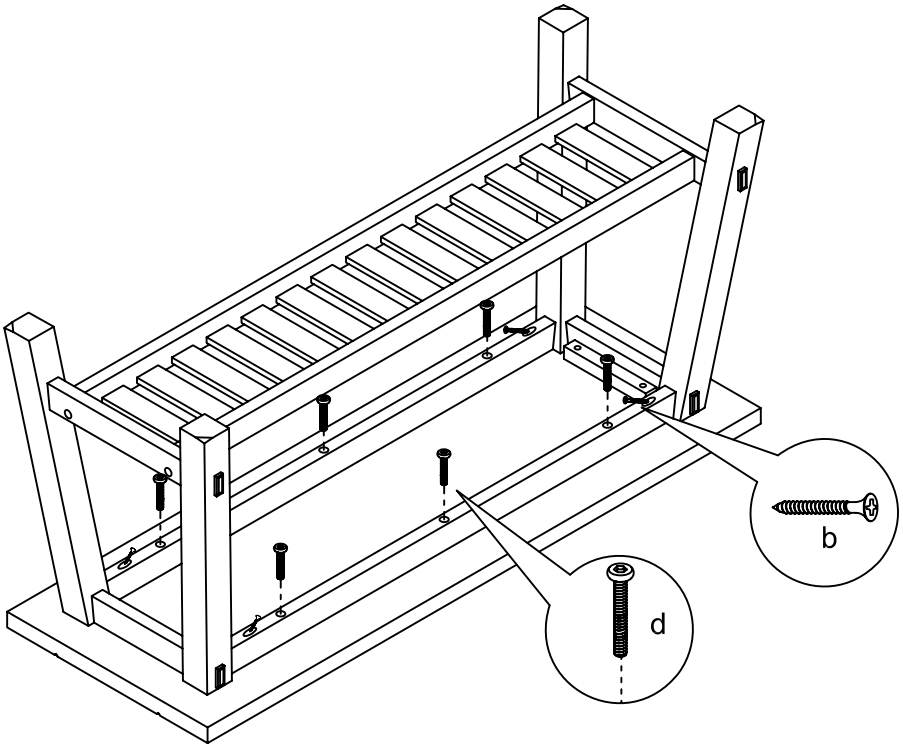

FIG 4

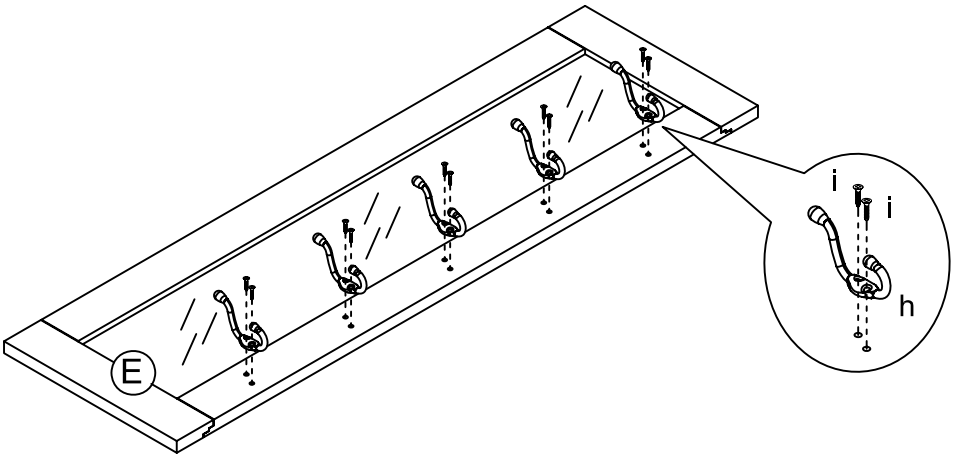
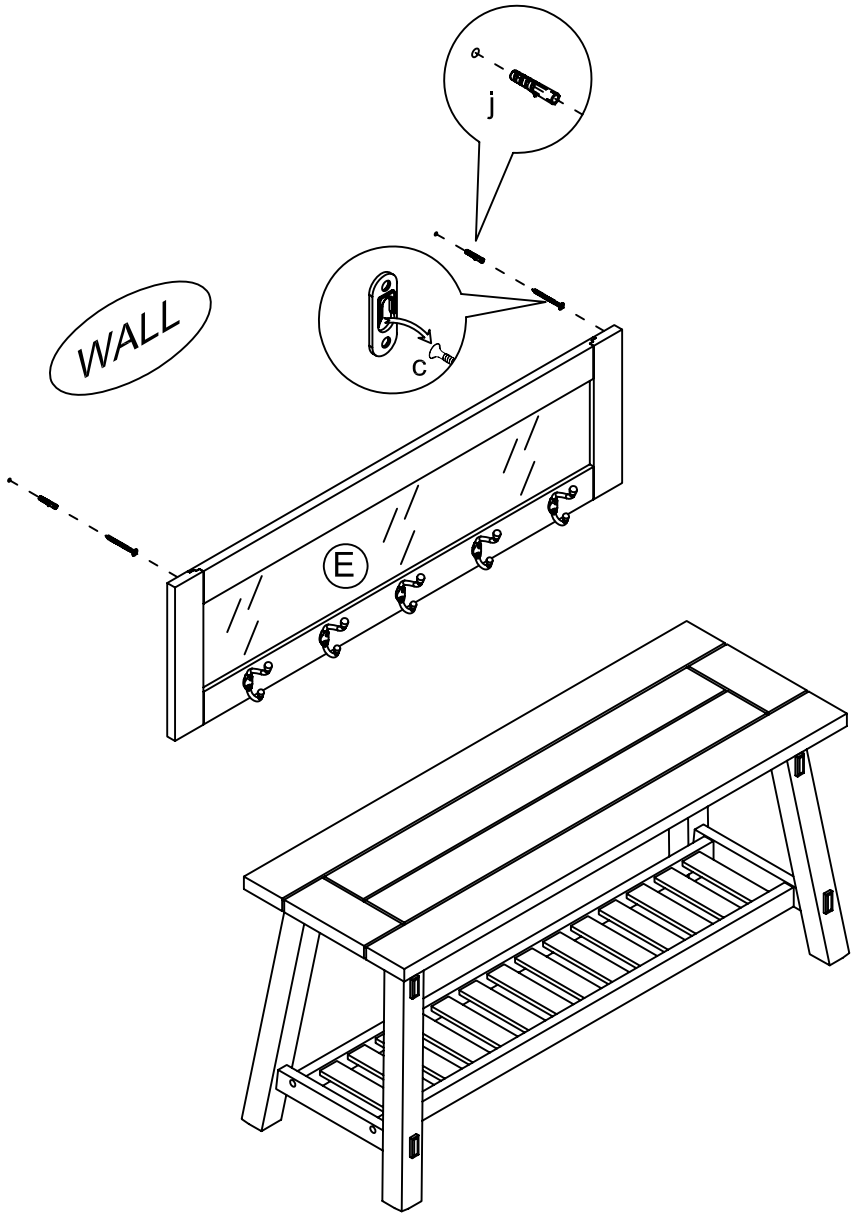
FIG 5