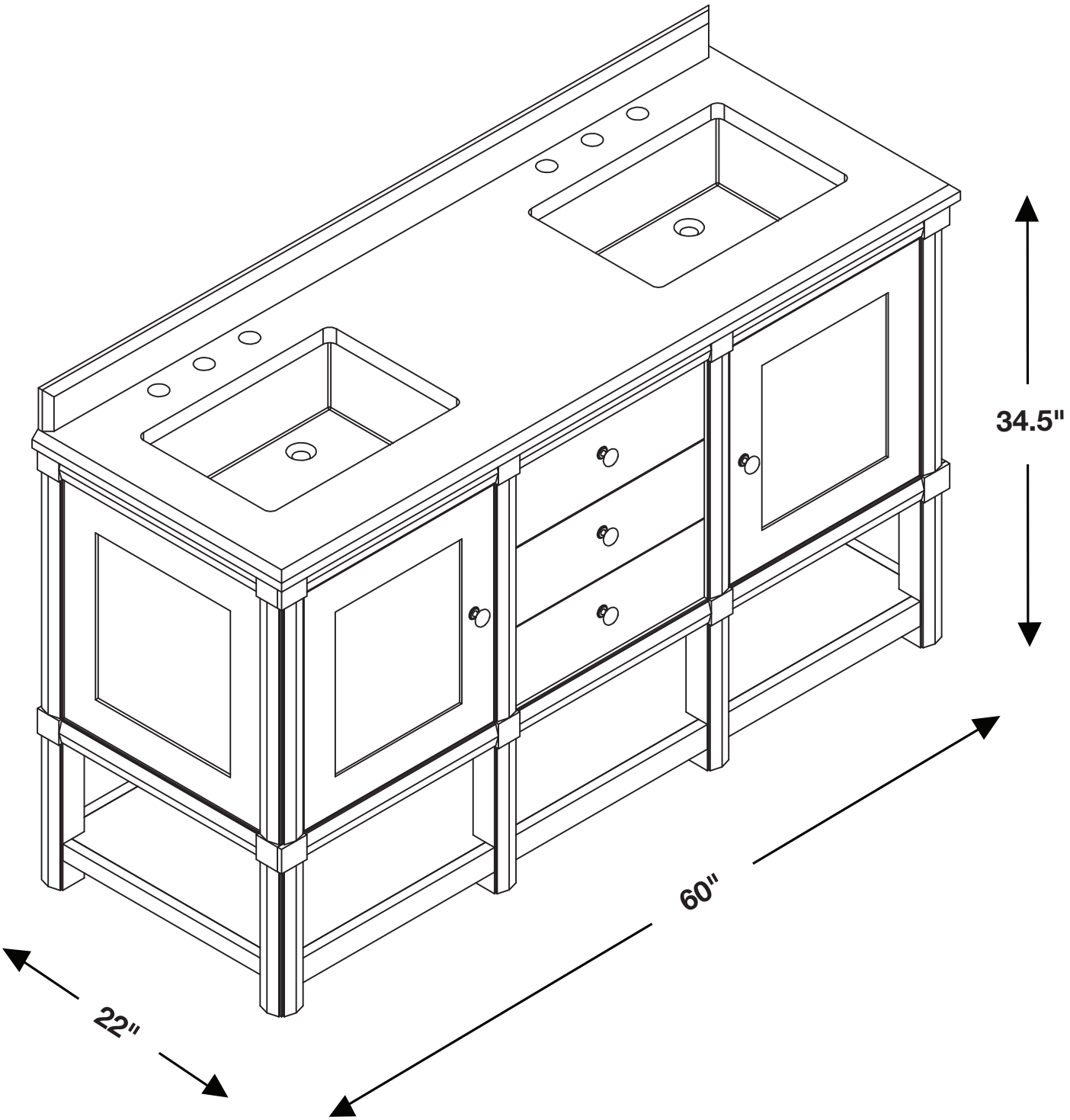
34.5"
60"
22"