WALTER 30

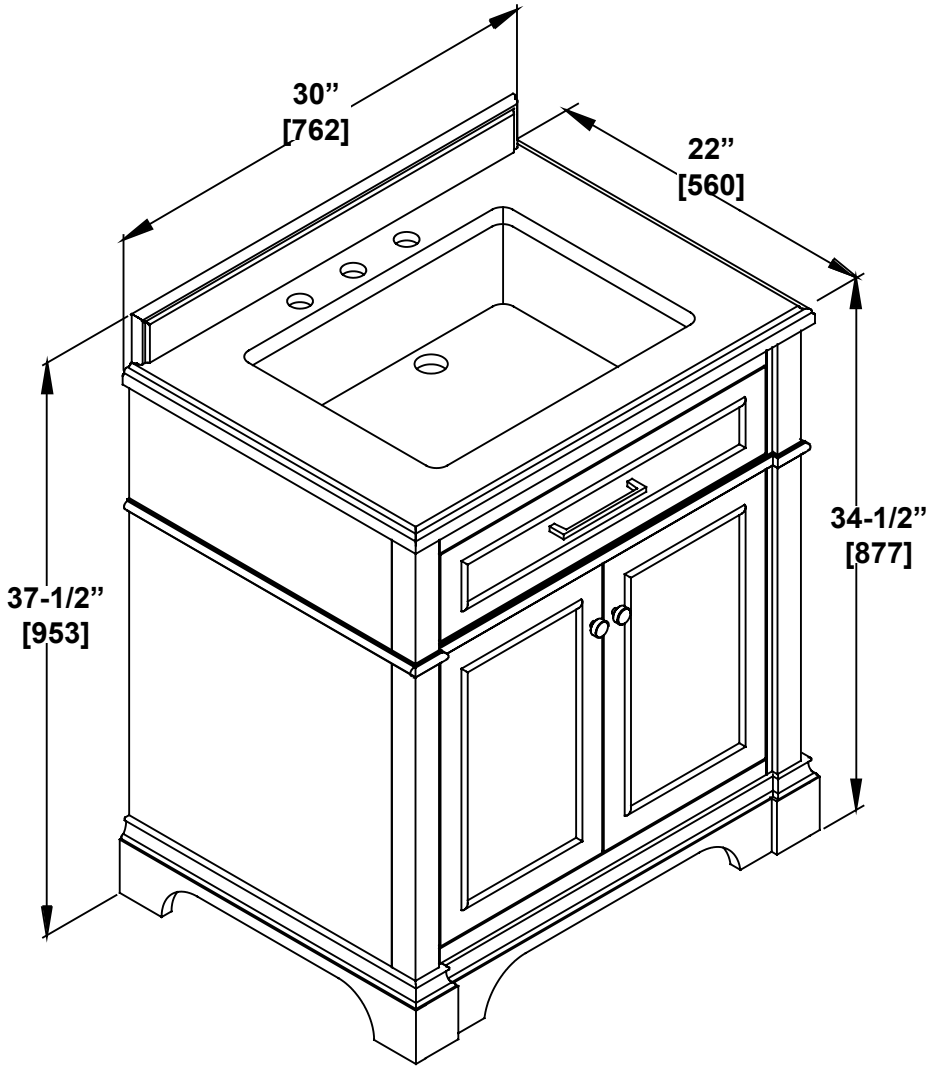
30”
[762]
22”
[560]
37-1/2”
[953]
34-1/2”
[877]

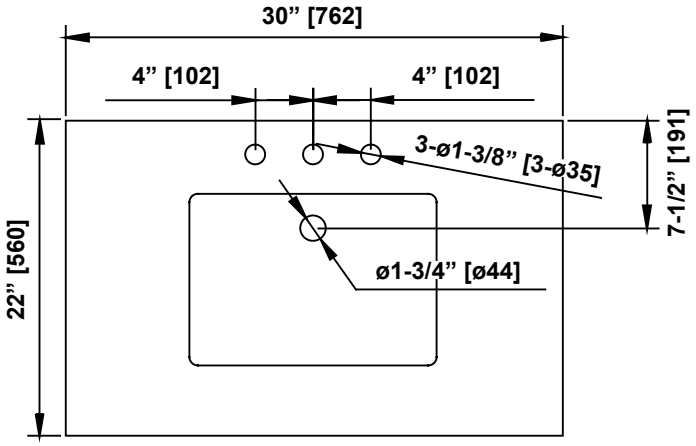
30” [762]
4” [102]
4” [102]
3-ø1-3/8” [3-ø35]
7-1/2” [191]
22” [560]
ø1-3/4” [ø44]

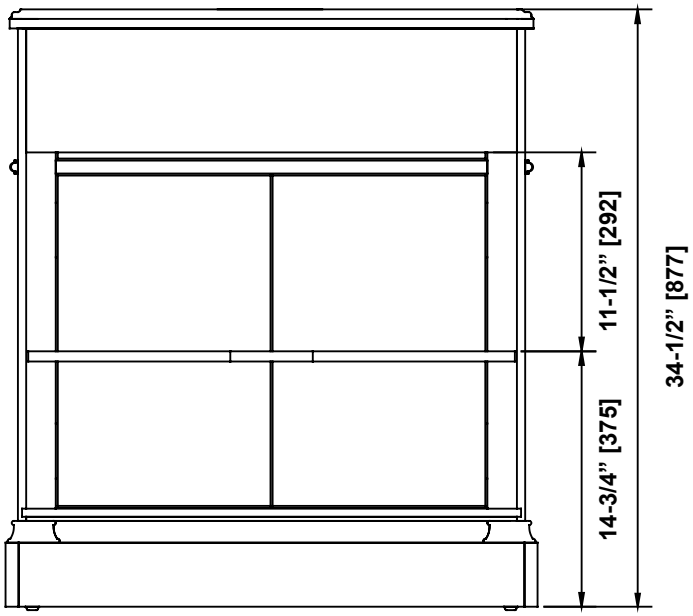
11-1/2” [292]
34-1/2” [877]
14-3/4” [375]