FMC022436/023036/023636/024836

MEDICINE CABINET

INSTALLATION GUIDE

FRESCA©

IMPORTANT SAFETY INSTRUCTIONS

When using an electrical furnishing, basic precautions should always be followed, including the following:

DANGER — **READ AND FOLLOW ALL INSTRUCTIONS BEFORE USING THIS CABINET.**

WARNING — To reduce the risk of burns, fire, electric shock or injury to persons. Use this furnishing only for its intended use as described in these instructions. Do not use attachments not recommended by the manufacturer. Never drop or insert any object into any opening. Do not use outdoors.

WARNING — Risk of electric shock. Connect this furnishing to a properly grounded circuit only. See Grounding instructions.

CAUTION — Total/Maximum shelf load 34lbs/15.4kg

GROUNDING INSTRUCTIONS:

This product must be connected to a grounded metal, permanent wiring system, or an equipment-grounding conductor must be run with the circuit conductors and connected to the equipment-grounding terminal or lead on the product.

WARNING — An Electrical option cabinet must be wired to a 20 Amp GFI (Ground Fault Interrupter) protected circuit when used in bathrooms and all other locations required by the National Electric Code.

PLEASE SAVE THESE INSTRUCTIONS FOR FUTURE REFERENCE

©2018 FRESCA™ All rights reserved. This material may not be reproduced, displayed, modified or distributed without the express prior written permission of the copyright holder.

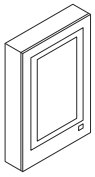

FMC022436/023036/023636/024836

MEDICINE CABINET

INSTALLATION GUIDE

FRESCA®

TOOLS REQUIRED FOR ASSEMBLY

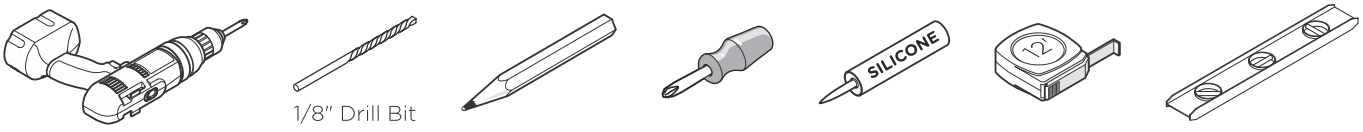

PARTS

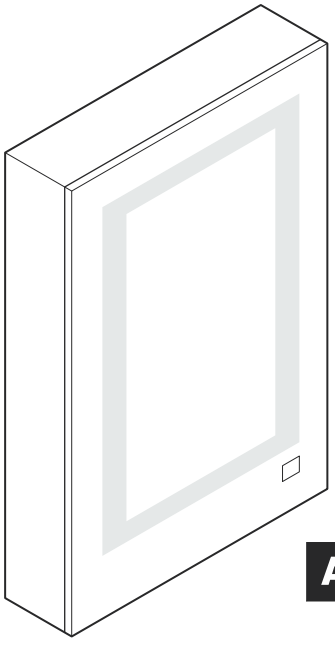

A Single Door Cabinet

OR

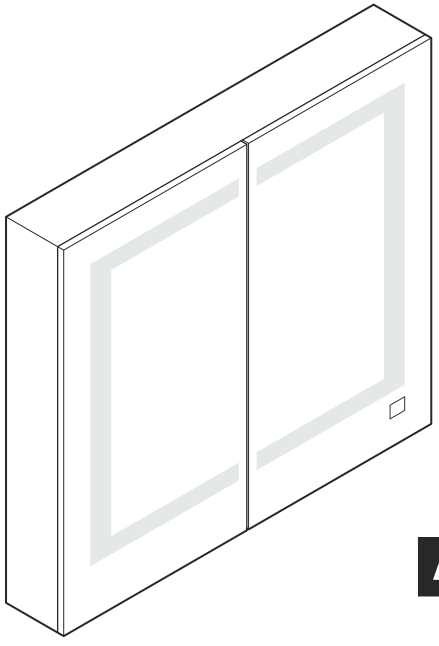

A Double Door Cabinet

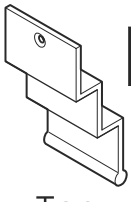

D Top Mounting Bracket (2/3)

F Shelf Clip (12)

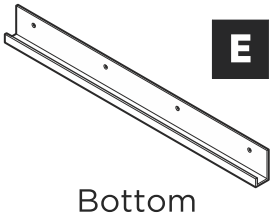

E Bottom Mounting Bracket (1)

G Screw Cap (10/14)

H Hole Plug (10/12)

C Glass Shelf (3)

B Glass Side Panel (2)

J Hinge Screw (8/16)

I Wire Nut (7/14)

©2018 FRESCA™ All rights reserved. This material may not be reproduced, displayed, modified or distributed without the express prior written permission of the copyright holder.

DIMENSIONS

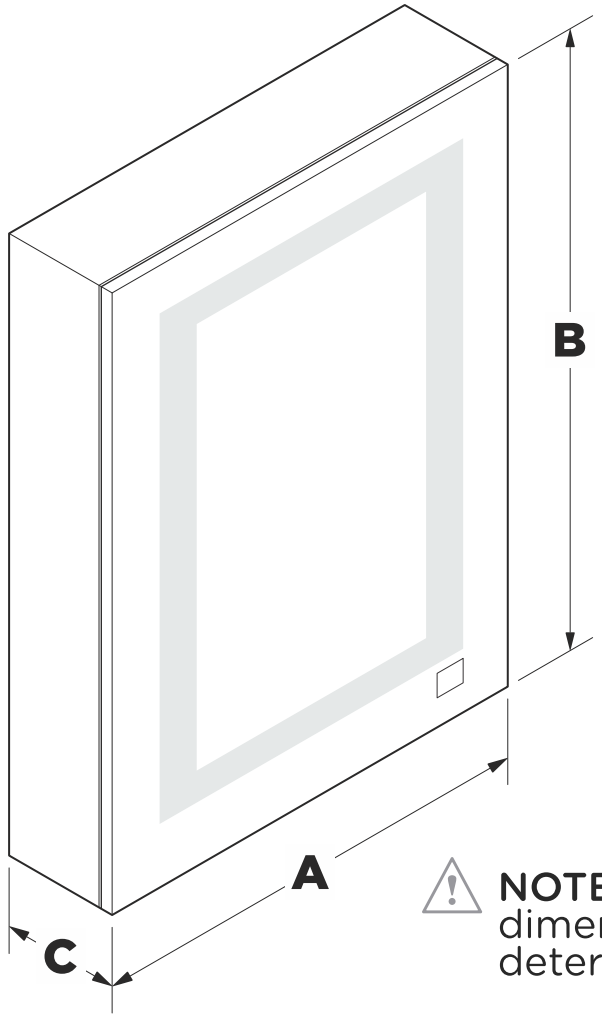

A - Cabinet's Width

B - Cabinet's Height

C - Cabinet's Depth

NOTE: Determine overall medicine cabinet dimensions. If recessing medicine cabinet, determine rough-in dimensions.

SKU:	FMC022436	FMC023036	FMC023636	FMC024836
A	24″	30″	36″	48″
B	36″	36″	36″	36″
C	5″	5″	5″	5″
ROUGH IN SIZES	22.5″ x 34.4″	28.4″ x 34.4″	34.4″ x 34.4″	46.1″ x 34.4″

*All dimensions & specifications are approximate and subject to change without notice.

©2018 FRESCA™ All rights reserved. This material may not be reproduced, displayed, modified or distributed without the express prior written permission of the copyright holder.

PRIOR TO MOUNTING:

1 Remove Door/s Prior mounting your cabinet. Start with unpluging the door from the cabinet.

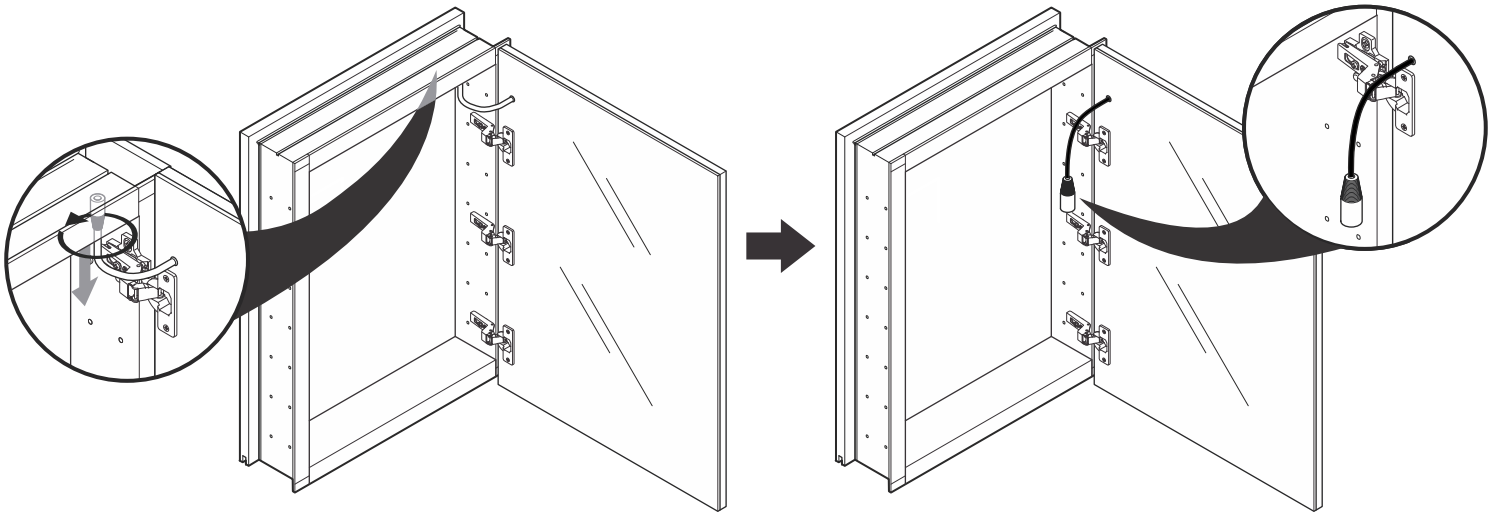

2 While supporting the door release the lever under the hinge arm (See Illustration 2A).
Slide the door off the frame.

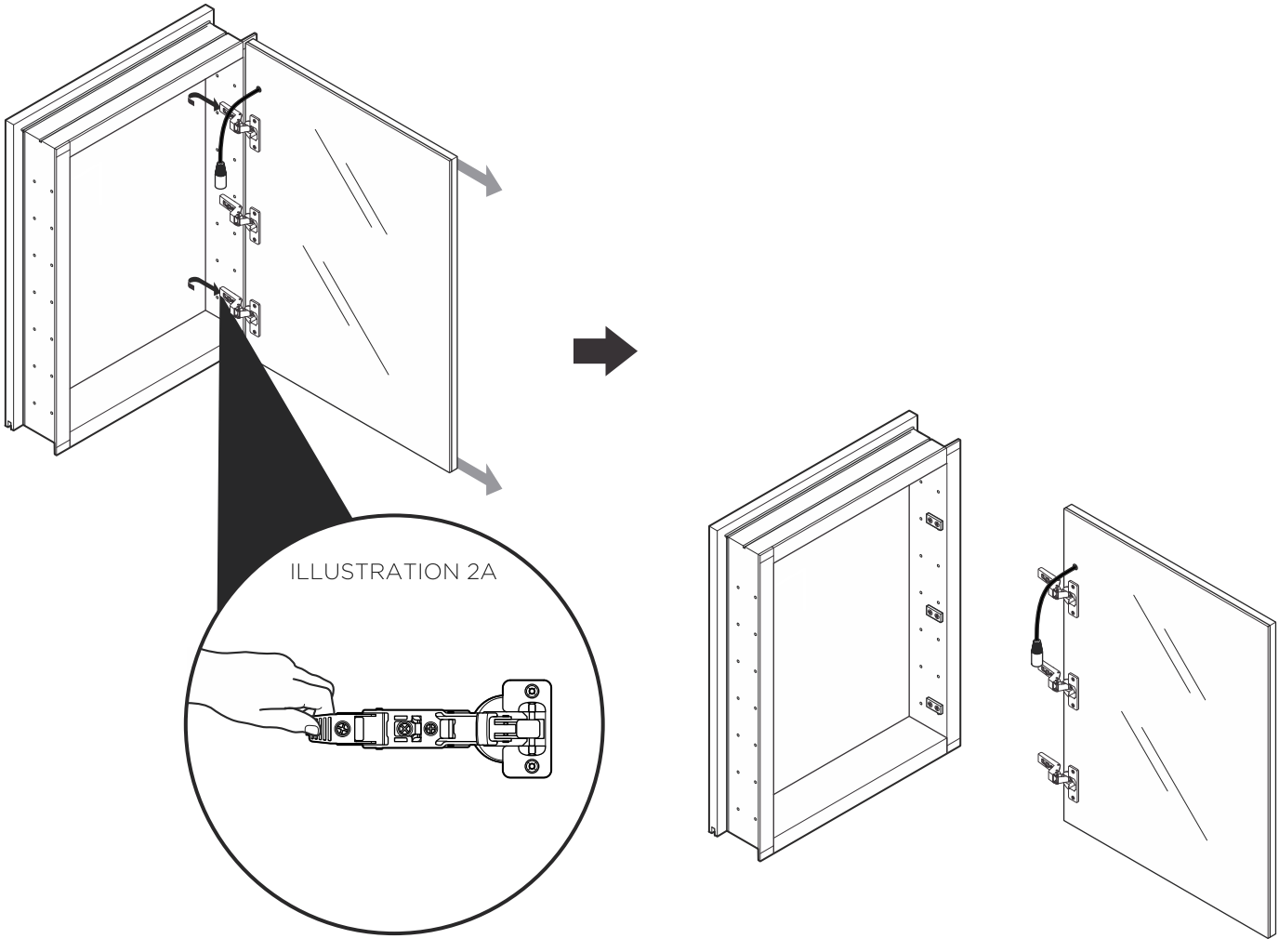

©2018 FRESCA™ All rights reserved. This material may not be reproduced, displayed, modified or distributed without the express prior written permission of the copyright holder.

ELECTRIC CONNECTIONS

ALL WIRING SHOULD BE DONE BY A QUALIFIED LICENCED ELECTRICIAN

WARNING: Shut off power before wiring the cabinet.

WARNING: An Electrical option cabinet must be wired to a 20 Amp GFI (Ground Fault Interrupter) protected circuit when used in bathrooms and all other locations required by the National Electric Code.

CAUTION: This product must be connected to a grounded, metal permanent wiring system or an equipment-grounding conductor must be run with the circuit conductors and connected to the equipment grounding terminal or lead on the product.

CAUTION: Requires 120 VAC 20 Amp GFI protected circuit.

The electric wire comes trough the access hole in the side of the cabinet.

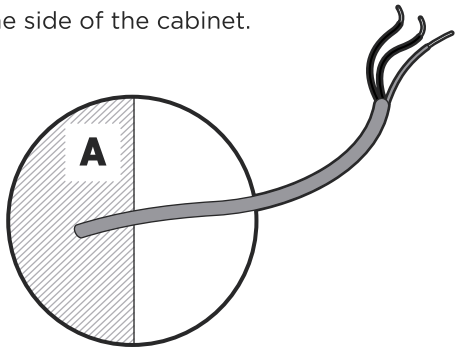

Make connections
Neutral to white.
Line to black.
Ground to green.

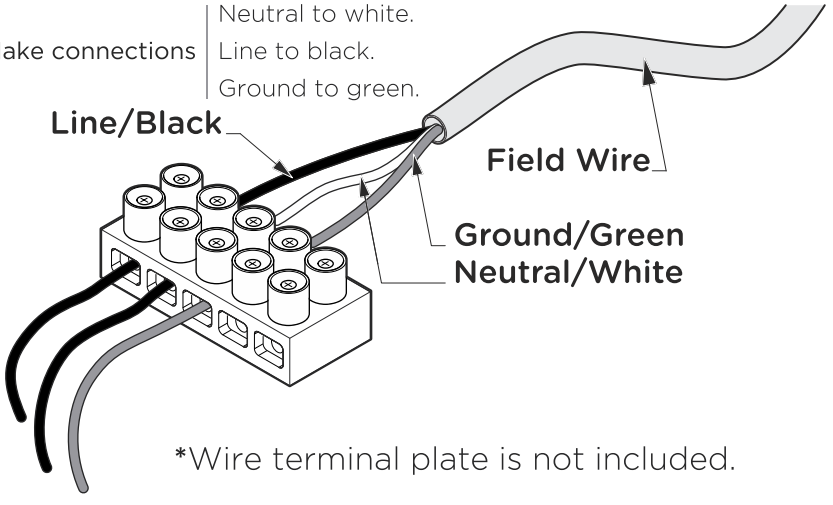

*Wire terminal plate is not included.

RECESS-MOUNT INSTALLATION

Make Rough Opening and Frame on all sides. Reference your Cabinet Model Dimensions and Rough in dimensions on Page 3.
Make sure the cabinet door has a clearance of at least 1" from the top of the faucet and 1" from the ceiling.

Electric wiring: Be sure to provide enough wire to make the proper and safe connection to the Field/Power.
Place cabinet in rough-in and make sure the cabinet is square, level and plumb.
Secure the cabinet with the mounting screws into the framing studs.

©2018 FRESCA™ All rights reserved. This material may not be reproduced, displayed, modified or distributed without the express prior written permission of the copyright holder.

RECESS-MOUNT INSTALLATION

1

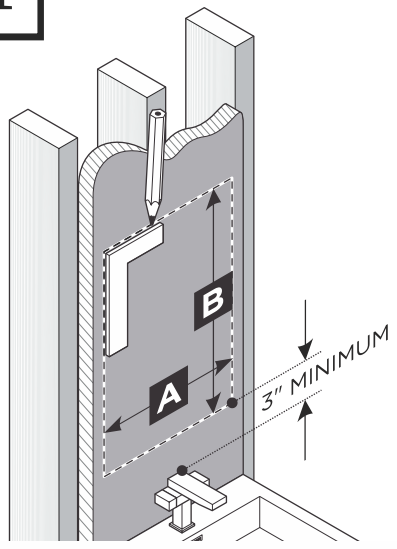

Draw the perimeter of the medicine cabinet on the wall.

2

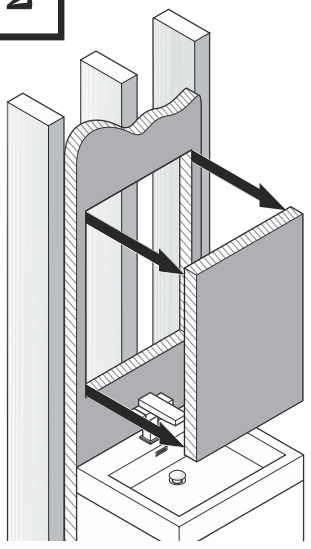

Cut the marked perimeter with appropriate tool.

3

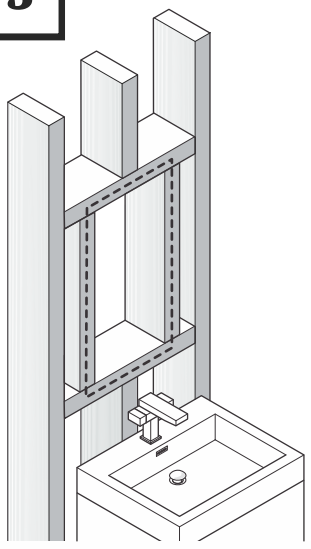

Frame the cutout opening.

(See Illustration below)

4

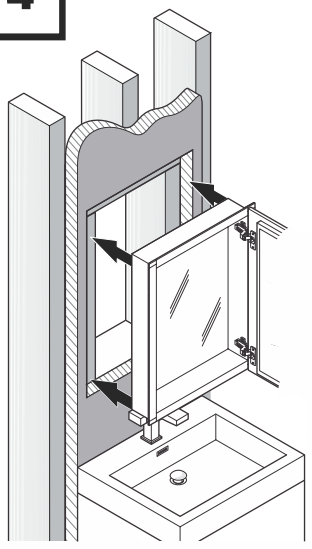

Place and hold the medicine cabinet in the cutout opening.

5

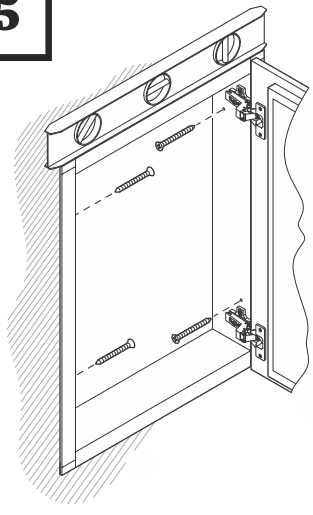

Level, then secure the medicine cabinet with the screws through the mounting holes into the framing studs.

6

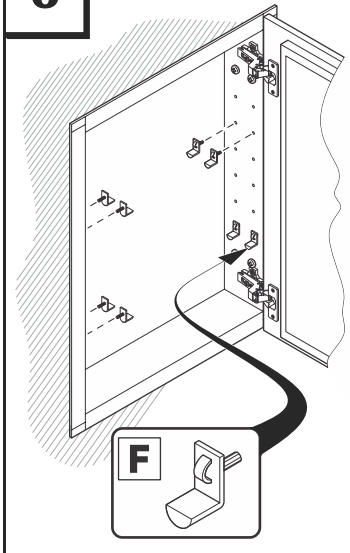

Choose the position for your shelves, then push and twist the snap-in pins into place.

4 STEPS TO FRAME THE CUTOUT OPENING

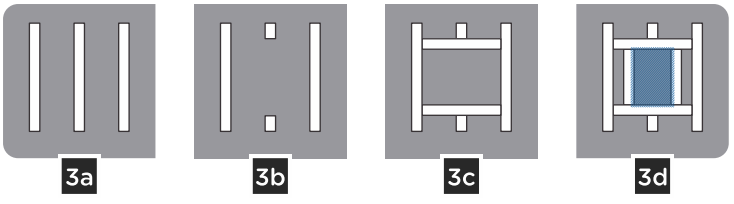

7 GLASS SHELF INSTALLATION

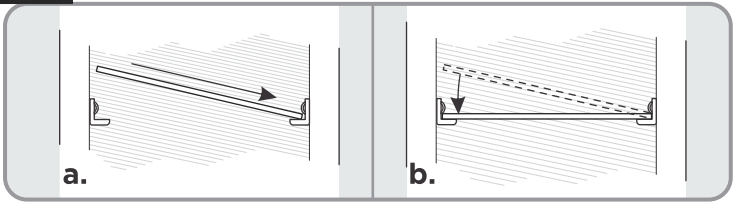

a. Push a side of the glass shelf into the left or the right pins.

b. Snap the glass shelf into the opposite side.

OPTIONAL DOOR ADJUSTMENT

Doors may need to be adjusted after the initial shipping of the cabinet. The cabinet doors have a three-way adjustment feature.

Height, side-to-side, level and depth can be adjusted.

With the hinge slightly closed you can access the middle screw for up/down adjustment.

With the hinge fully extended you can access the front and back screws. These screws will move the door side to side and in and out.

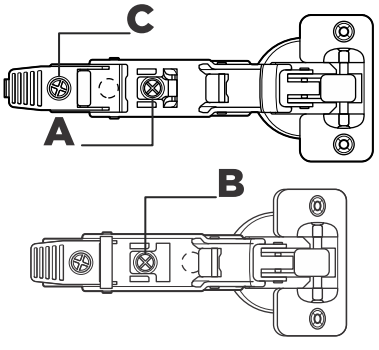

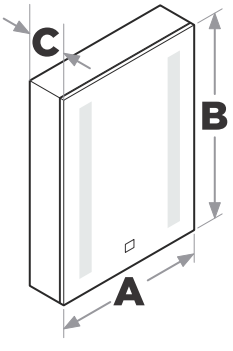

©2018 FRESCA™ All rights reserved. This material may not be reproduced, displayed, modified or distributed without the express prior written permission of the copyright holder.

SURFACE-MOUNT INSTALLATION

1

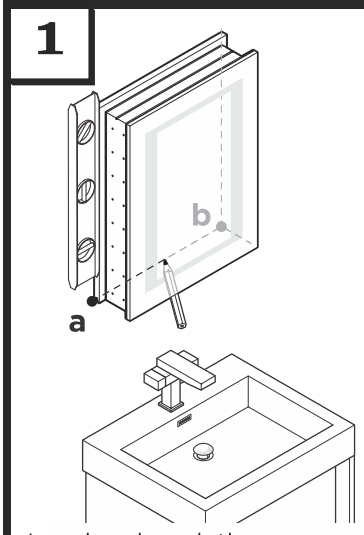

Level and mark the medicine cabinet's location on the wall from point **a** to point **b**.

2

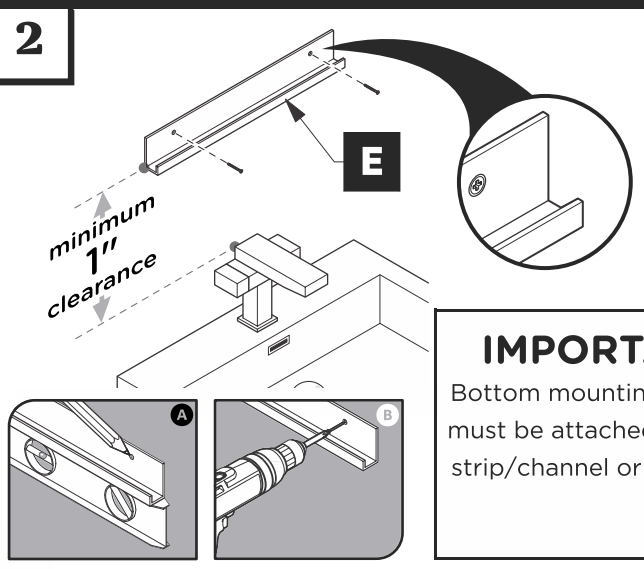

Level and mark.

Attach bottom bracket **(E)** to the wall.

IMPORTANT:
Bottom mounting brackets must be attached to furring strip/channel or wall studs.

3

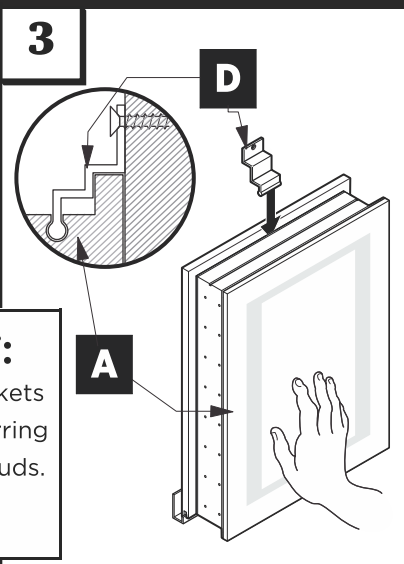

Insert top mounting bracket **(D)** into the top of the cabinet **(A)**.

4

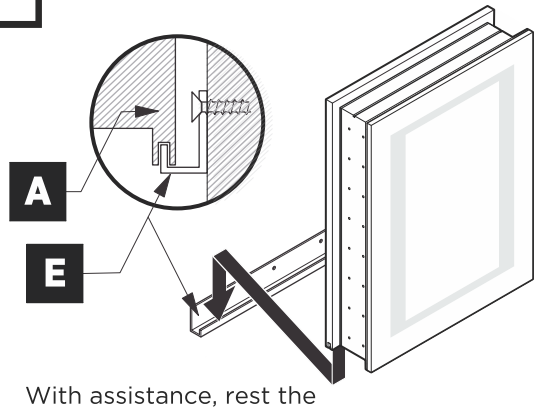

With assistance, rest the medicine cabinet **(A)** on the bottom mounting bracket **(E)** and hold it in place.

5

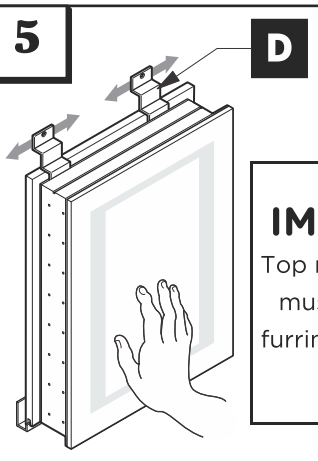

IMPORTANT:
Top mounting brackets must be attached to furring strip/channel or wall studs.

You can slide top mounting brackets **(D)** to the left or right to achieve a desired position.

6

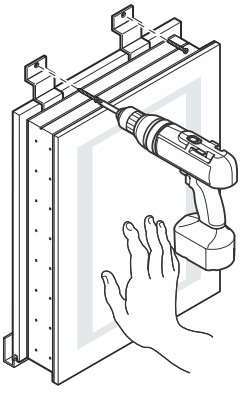

Attach the top mounting brackets to the wall using a drill.

7

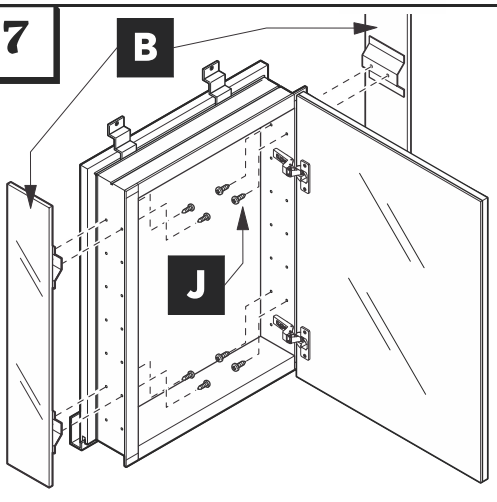

Attach mirrored side panels **(B)** to the medicine cabinet using a screwdriver and provided screws **(J)**.

8

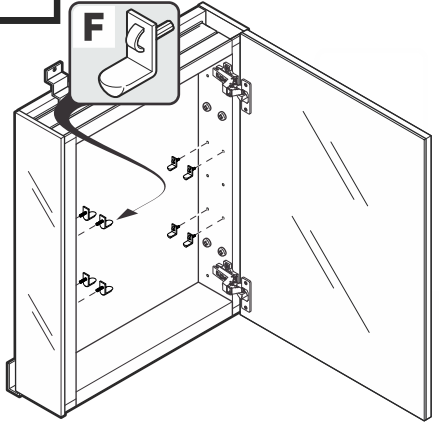

Insert clear snap in shelf clips **(F)** into holes on the sides of the cabinet.

9

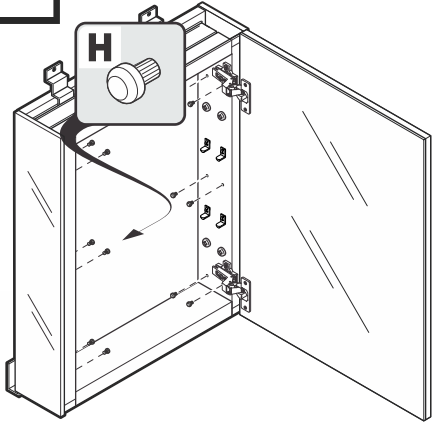

Insert clear plugs **(H)** into the remaining/unused holes of the cabinet.

©2018 FRESCA™ All rights reserved. This material may not be reproduced, displayed, modified or distributed without the express prior written permission of the copyright holder.

SURFACE-MOUNT INSTALLATION

10

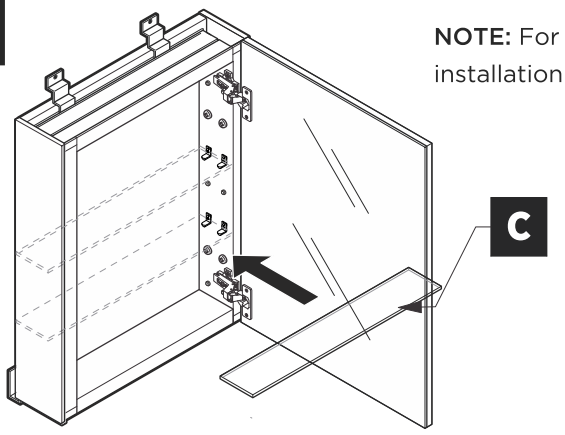

NOTE: For more details on the shelf installation please refer to Page 5, Step 7.

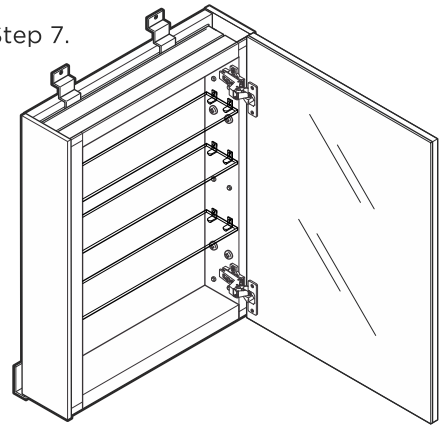

Connect the glass shelves **(C)** to the cabinet by pushing the side of the shelf in the left or right clip and snapping the shelf down.

MOUNTING BRACKETS INSTALLATION DETAILS

1

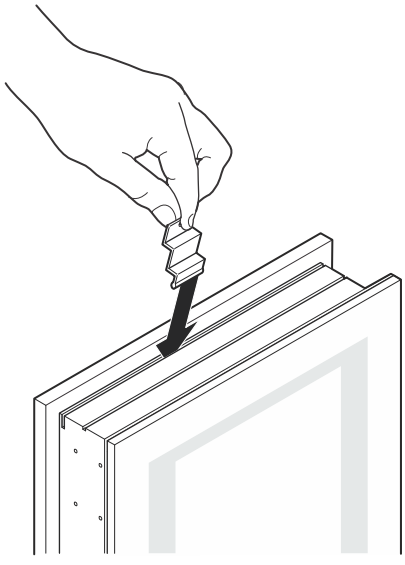

Slide top brackets into channel at the top of the cabinet.

2

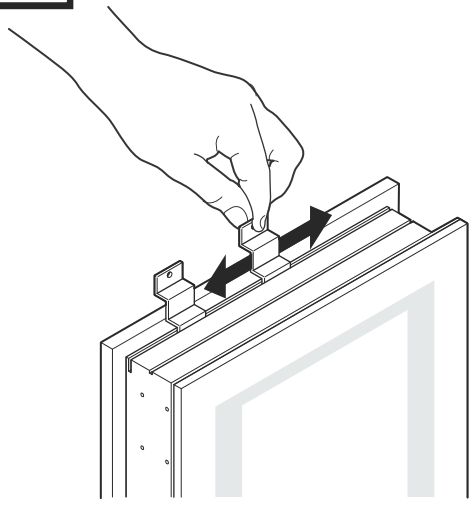

Make sure top brackets are locked in the grooves.

3

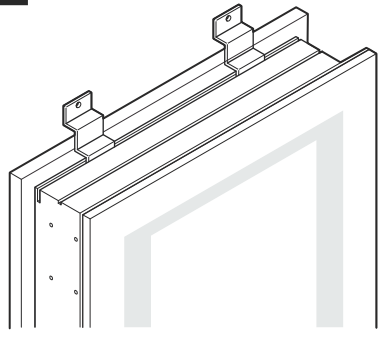

IMPORTANT:
Top mounting brackets must be attached to furring strip/channel or wall studs.

4

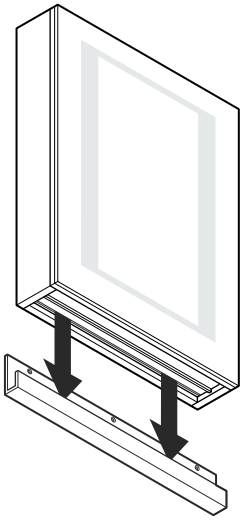

IMPORTANT:
Make sure cabinet is leveled and fully inserted into the grove of the bottom bracket.

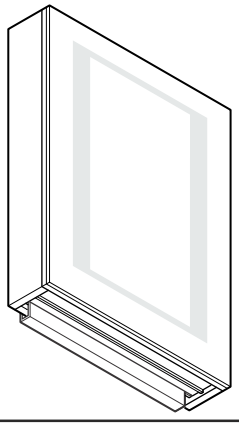

5 Test the fit of the cabinet before Final assembly.

ELECTRIC WIRING: Be sure to provide enough wire to make the proper and safe connection to the Field/Power (see Page 5 for electrical connection instructions).

©2018 FRESCA™ All rights reserved. This material may not be reproduced, displayed, modified or distributed without the express prior written permission of the copyright holder.

FINAL ASSEMBLY

1 Slide the doors into place by pinching the end of the hinge.

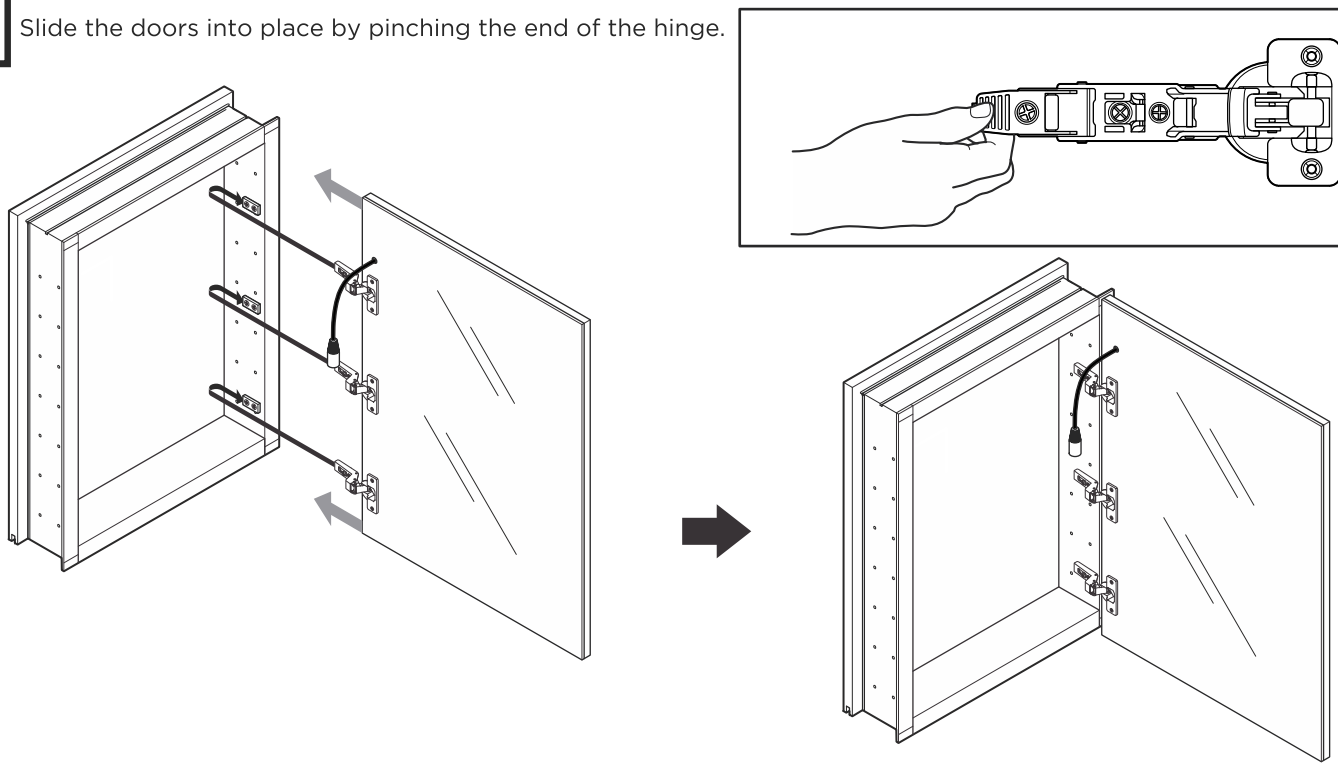

2 Plug the door into the cabinet.

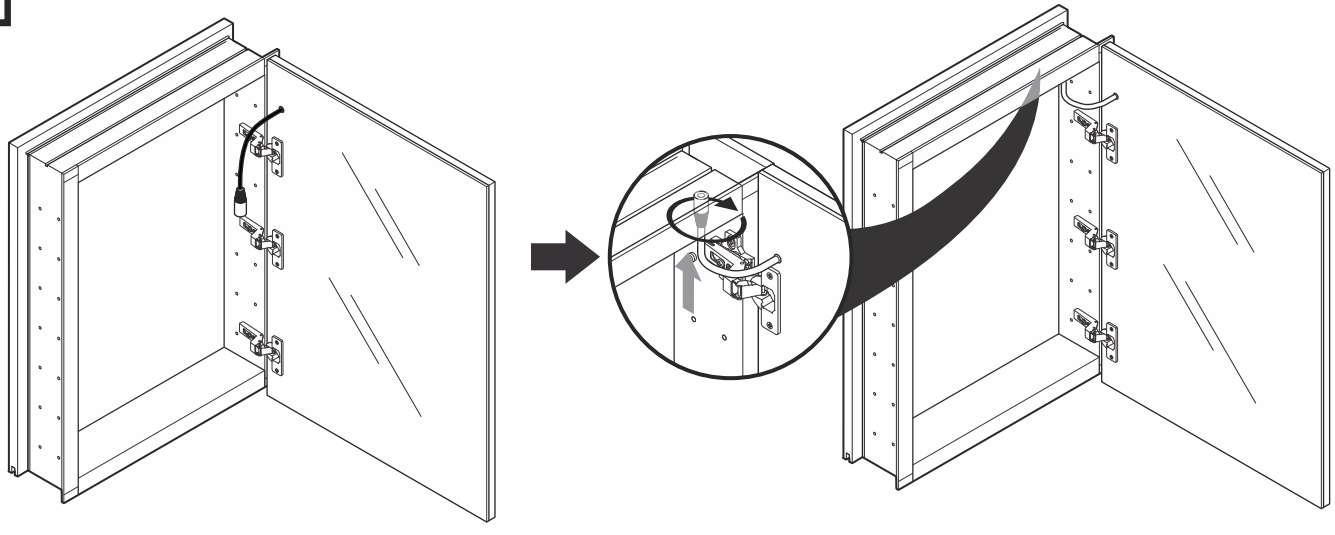

3

3a. Insert clear snap in shelf clips **(F)** into holes on the sides of the cabinet **(A)**.

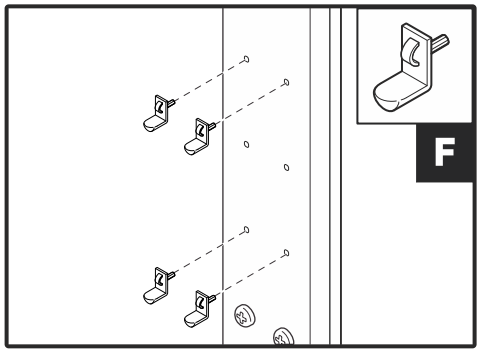

3b. Push the side of the shelf **(C)** in the left or right clip and snap the shelf **(C)** down.

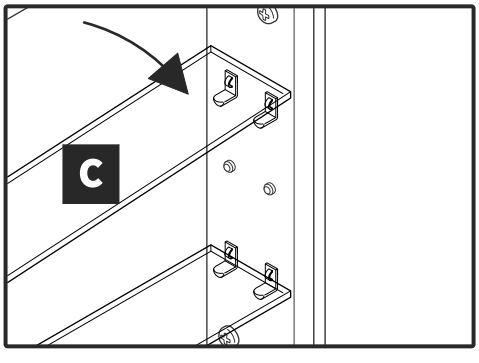

3c. Insert clear plugs **(H)** into the remaining or unused holes, then cover screw heads with the screw cups **(G)**.

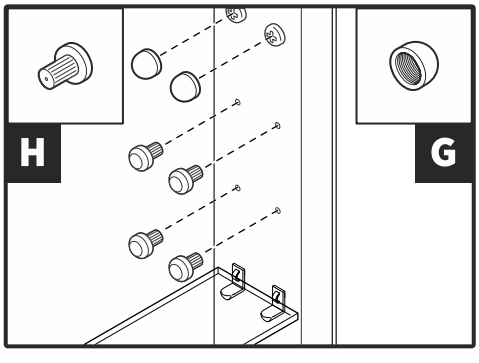

©2018 FRESCA™ All rights reserved. This material may not be reproduced, displayed, modified or distributed without the express prior written permission of the copyright holder.

How to use Defogger Switch and Dimmer Switch:

Touch the Defogger switch to turn the heating coils on or off.
Touch the Dimmer switch to turn the task light on or off. Press and hold the dimmer switch to dim or brighten the task lights. Dimmer switch stores the current light level intensity when switched off and on.

Use and Maintenance:

CAUTION: Maximum total shelf load 34 LBS
Cabinet and doors are constructed of mirrored glass and aluminum. Use a damp cloth to clean your cabinet and mirrors. Do not use any abrasive material as it may damage the surface and finish of the cabinet. A mild detergent may be used to clean the surfaces of the cabinet. When cleaning spray the cloth, not the cabinet, mirrors or surrounding surfaces.

TROUBLESHOOTING:

For service and parts information please email:

general@frescabath.com

For installation questions contact

RGM Distribution, Inc.

800.514.2143

©2018 FRESCA™ All rights reserved. This material may not be reproduced, displayed, modified or distributed without the express prior written permission of the copyright holder.