HOME
DECORATORS
COLLECTION

CHENNAI 37" VANITY COMBO

Supplier Model# CIBWVT3722D

Internet# 301779688	**SKU# 9945300340**

Assembled combo includes:
Vanity and Engineered stone top, with pre-attached oval undermount sink and an optional 4"H backsplash

Blue Wash finish

Antique Pewter hardware

3 Slow-closing dovetail drawers

1 Door with decoratve panel insert

1 Adjustable interior shelf

Adjustable leg levelers for uneven floors

Ogee edge top, pre-drilled for 8" widespread faucet

Fully assembled

Overall Dimensions: 37" x 22" x 35"H

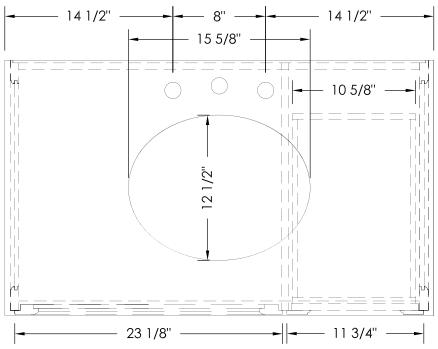

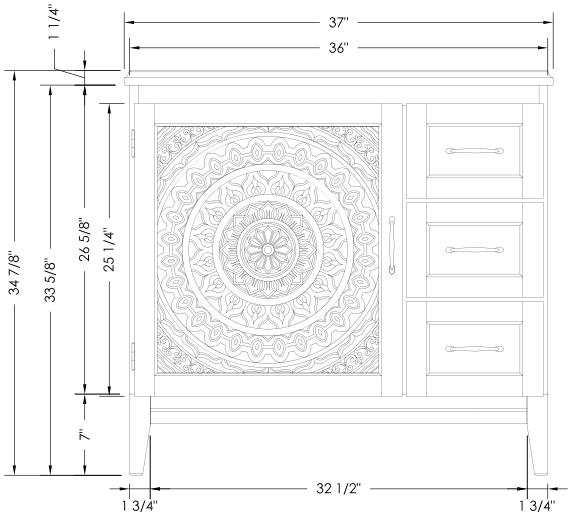

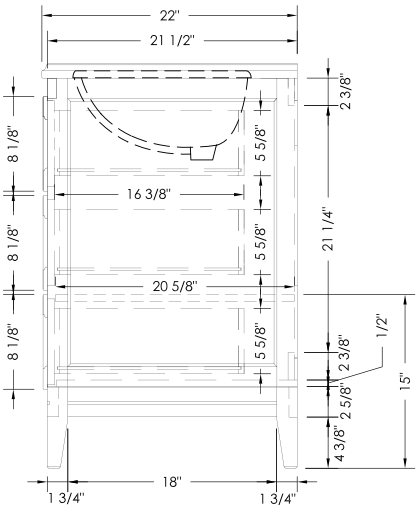

Copyright © 2017 Foremost Groups, Inc. All Rights Reserved. All dimensions are subject to change and variation without notice.