# 2 Door Accent Cabinet

Model Number: 5042396COM

Finish: Navy

OVERALL PRODUCT SIZE(in inches)

Cabinet: 31.5" (W)* 14.96" (D)* 33.97" (H)

Unit Net weight: 53.46 LBS (24.3 KG)

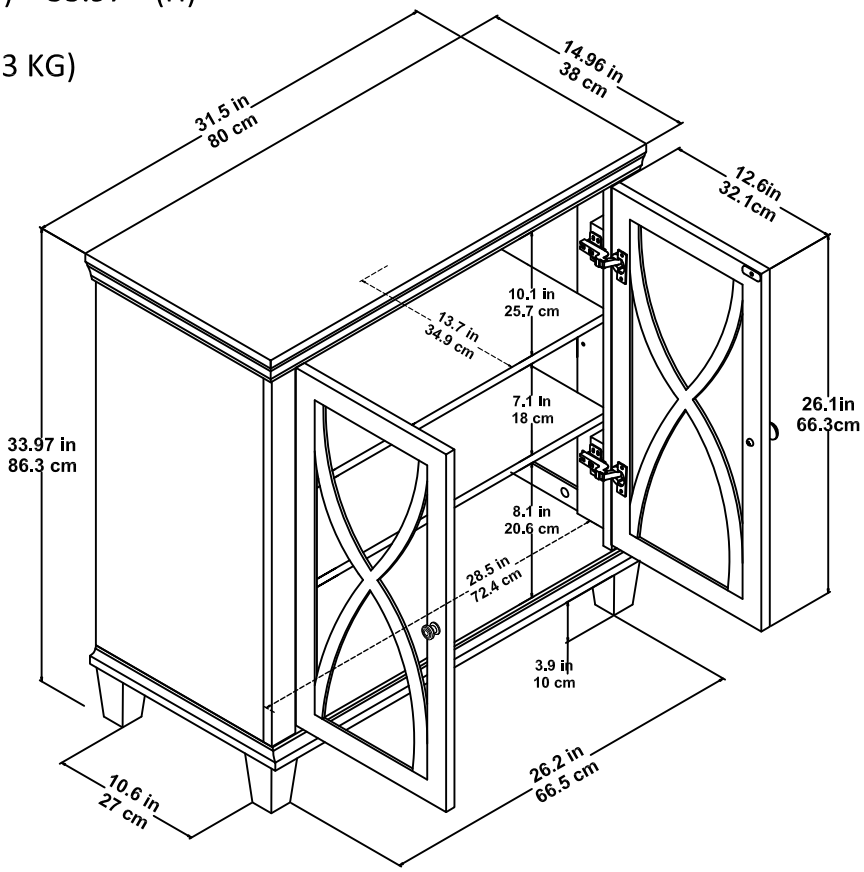

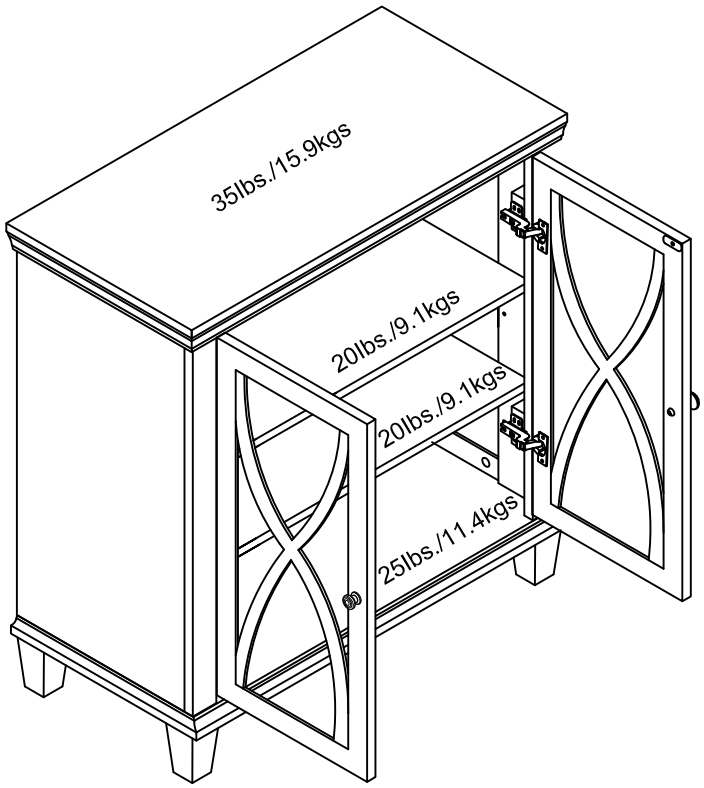
MAXIMUM WEIGHT CAPACITIES