Specifications

10000 Series 2-Handle Deck-Mount Roman Tub Faucet

MODEL	SKU#	FINISH
67416-3701	648-422	Polished Chrome
67416-3704	648-419	Brushed Nickel

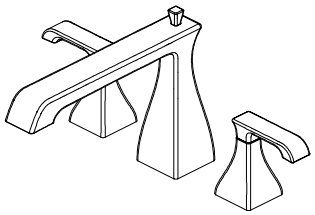

FEATURES

- Requires 3-Hole Sink with 8" On-Center
- 1/2" IPS Connections
- Min Flow Rate: 2.4 gpm (9 L/min) at 20 psi
- Max Countertop Thickness: 1 25/32"
- Spout Reach: 8 "
- Spout Height: 6 3/32"
- 1/4 Turn Ceramic Valve for Lifetime Drip-free Operation
- With Zinc Lever Handles
- Recessed Rectifier

CODE COMPLIANCE

- IAPMO Certified: ASME A112.18.1/CSA B125.1
- ADA Compliant

WARRANTY

- Limited Lifetime Warranty

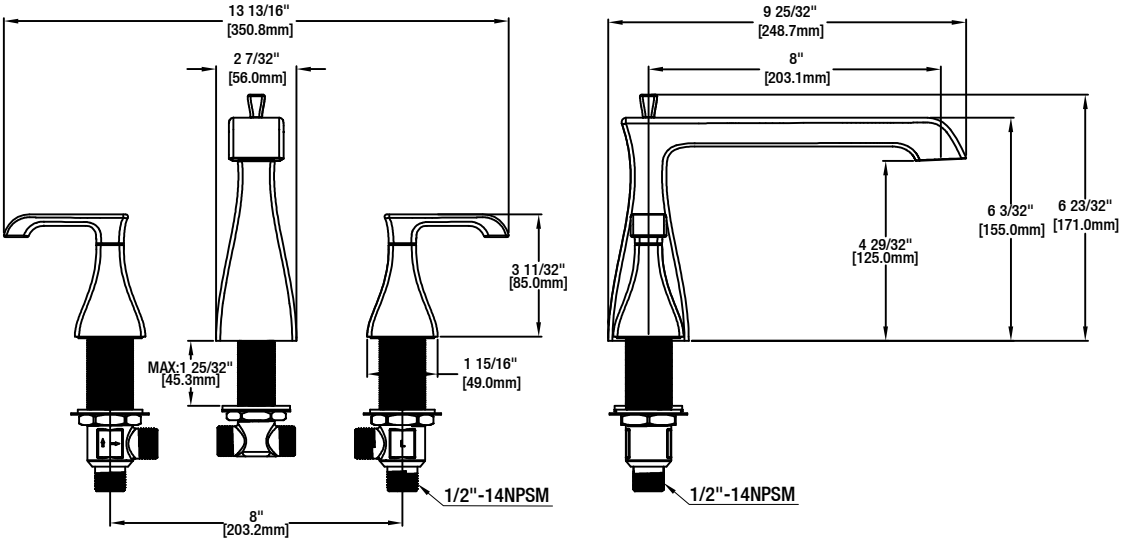

INSTALLATION DIMENSIONS