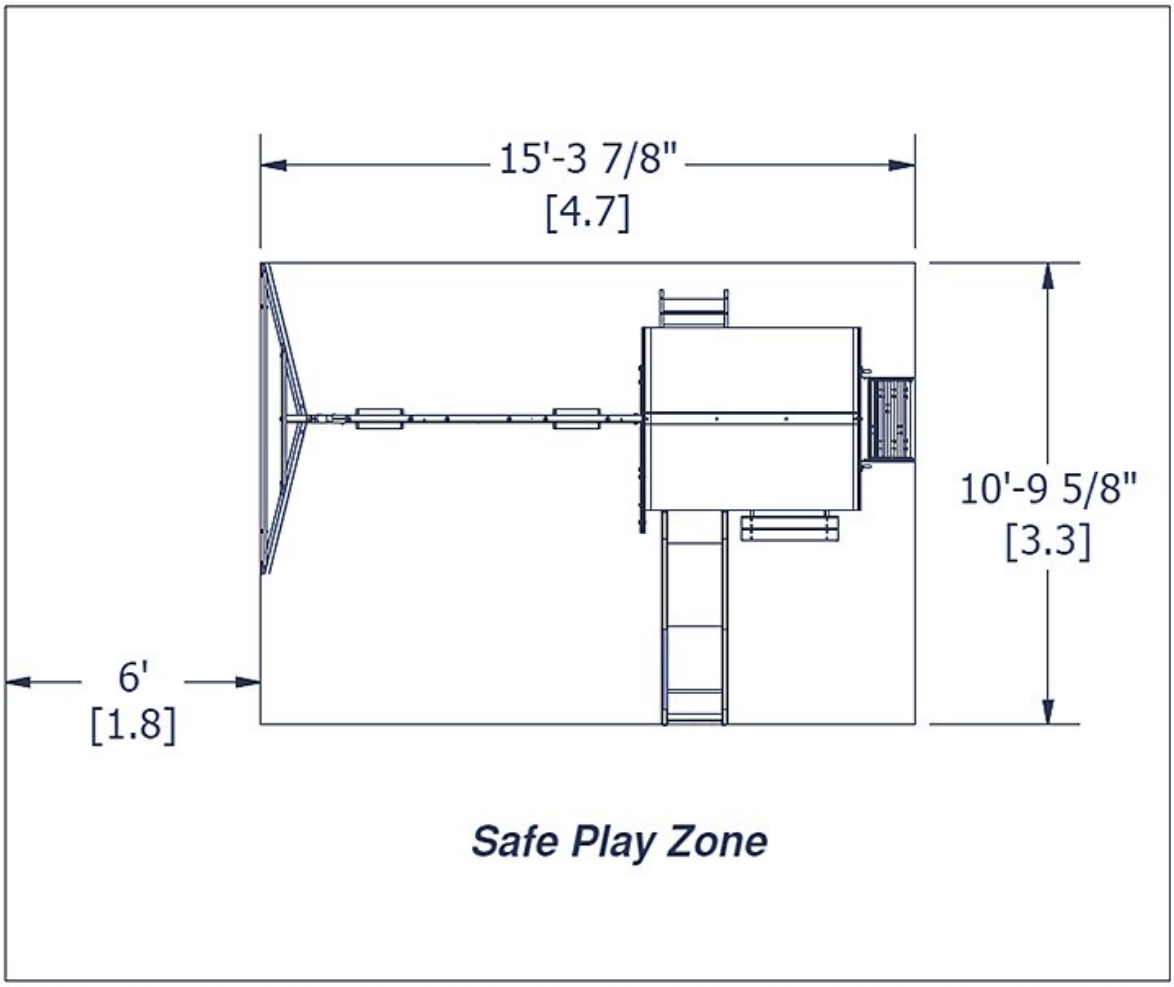

Safe play height: 14'-11 1/2" [2.7 m]
Maximum fall height: 6'-4 1/2" [1.9 m]
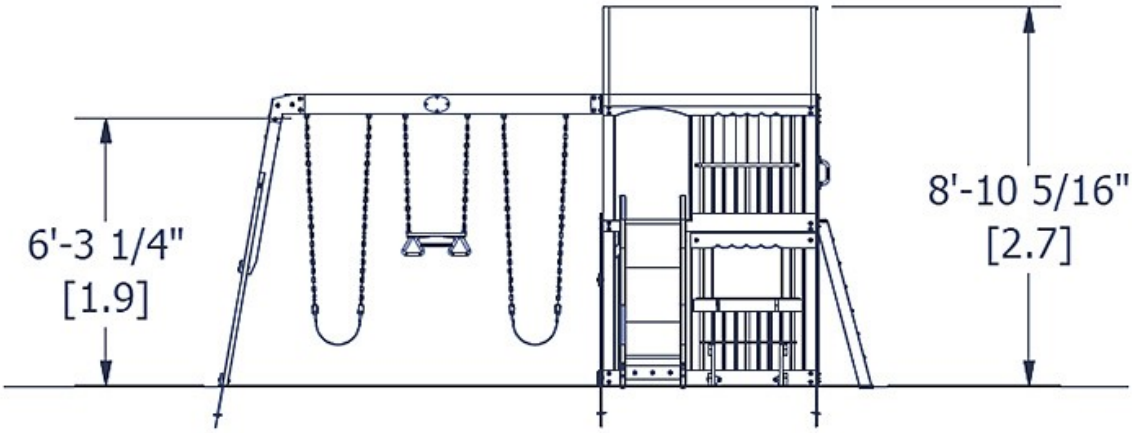
SOMERSET