Vinnova Modena Vanity Collection 756048-WH-BG-NM

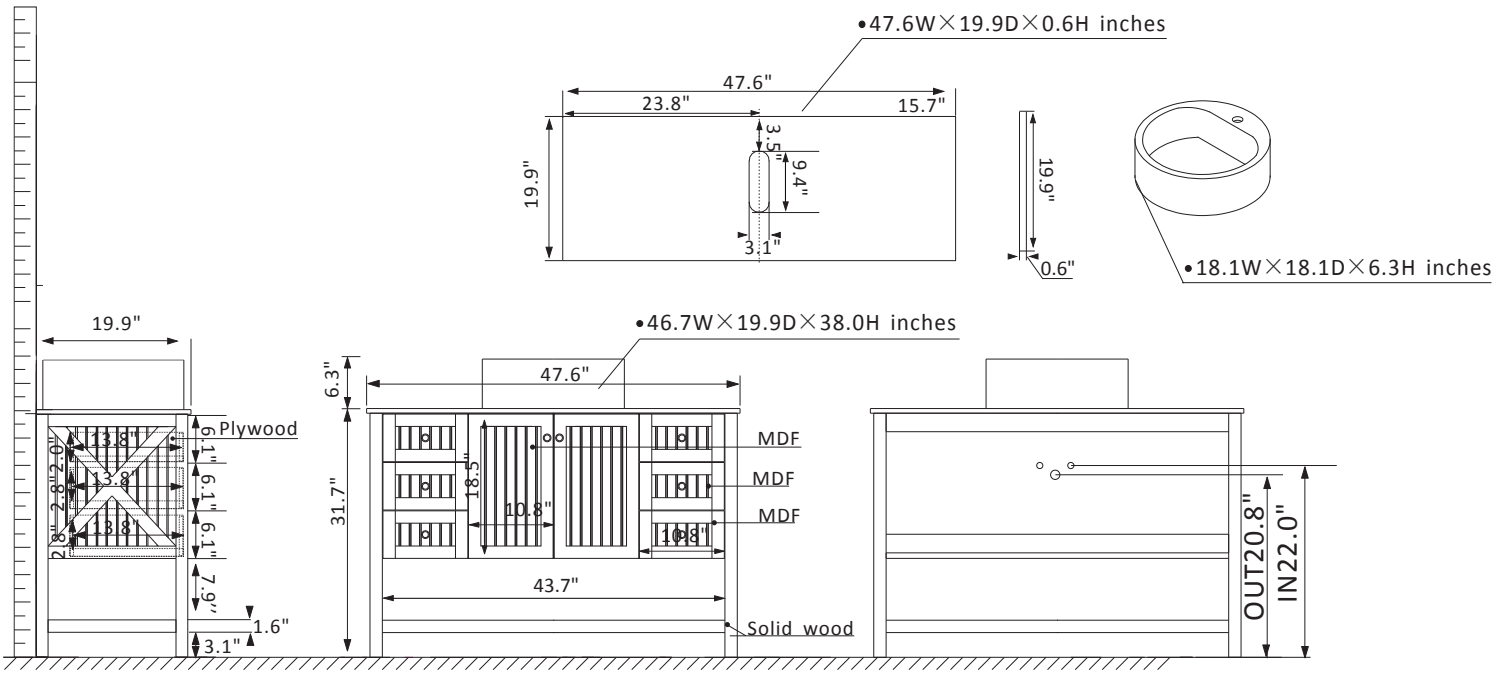

Features

Sturdy solid-oak/wood veneer construction
Available in White and Grey finish
Available with Dark Black glass top
Single raised, round sink
1-hole faucet mount
Two Soft-closing doors
2 of Two in one roomy Soft-Closing drawers and 2 Soft-Closing drawers
Striking satn nickel-finish hardware
Easy plumbing and faucet installaton*

* Does not include faucet, drain assembly, or P-trap

VINNOVA
FASHION BATHROOM LIFE