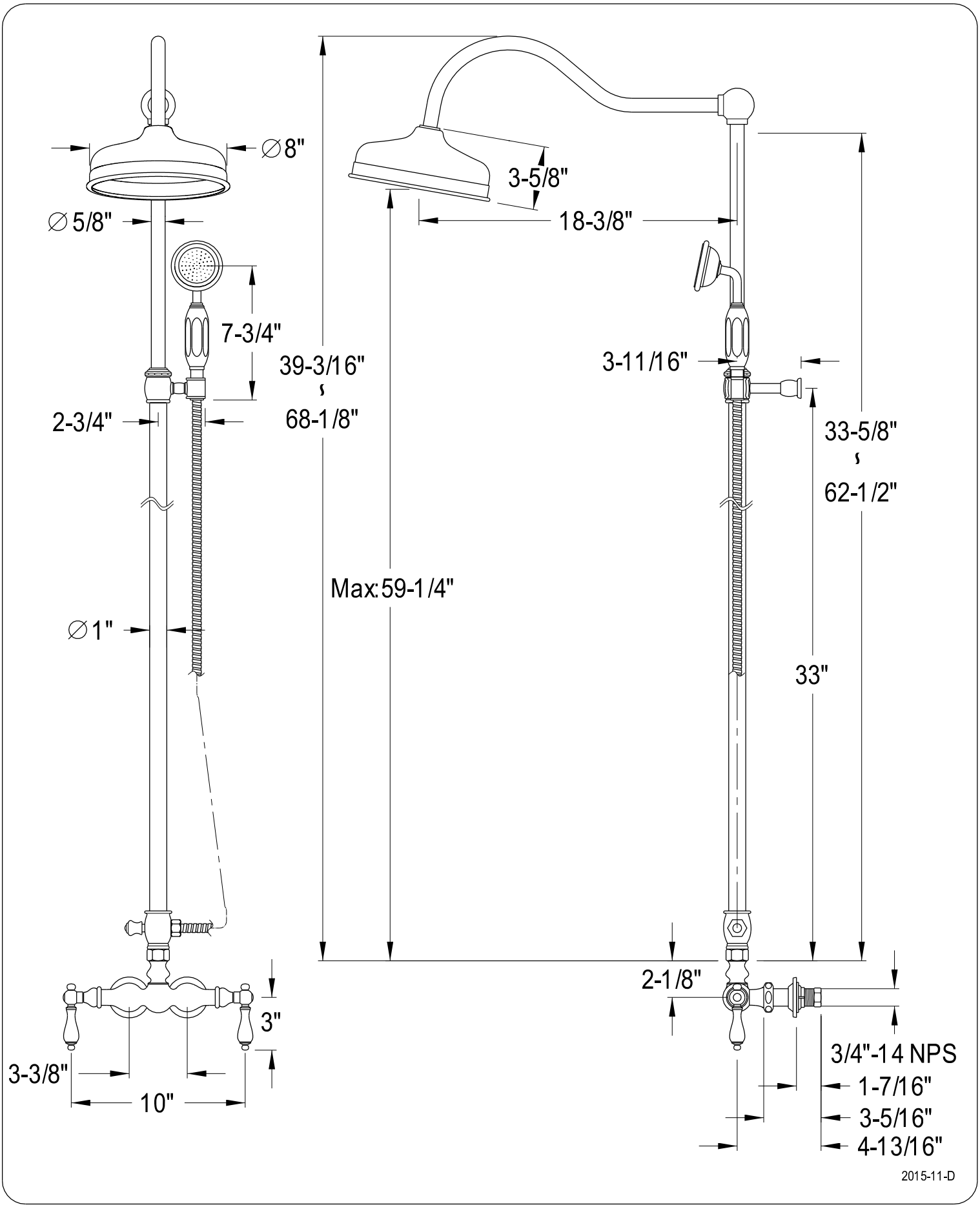Wall Mount Shower Combo