Replacement Parts List — 9406 Series

1	5010003364	Lid Handle	5	5010003367	Control Knob
2	5010003485	Water Pan	6	5010003429	Plastic Feet
3	5010003363	Burner Assembly	7	5010003365	Wheel w/ Hardware
4	5010003366	Side Table Assembly	8	5010003430	Side Handle

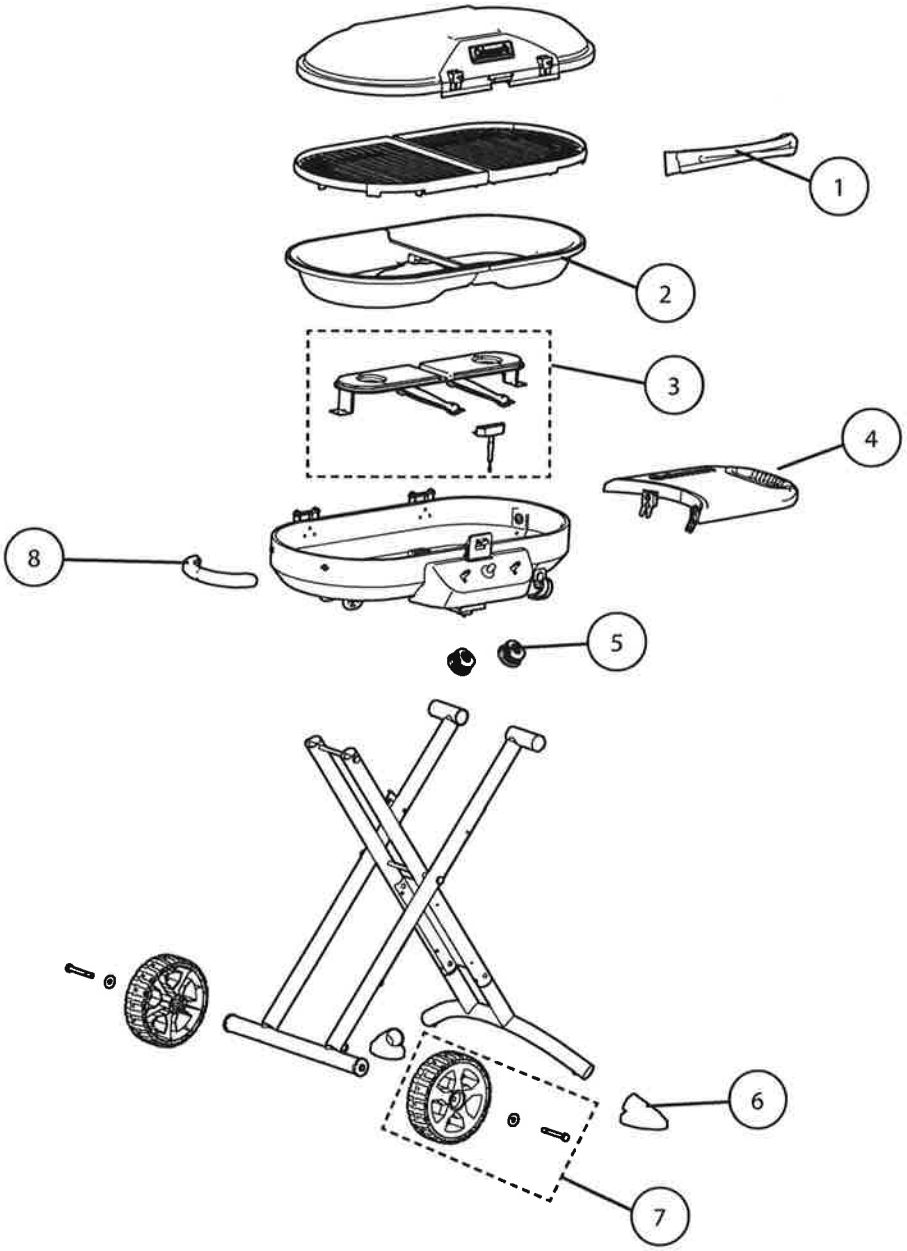

Additional Accessories
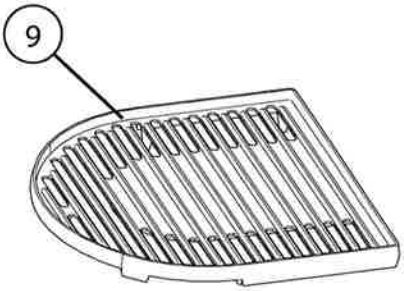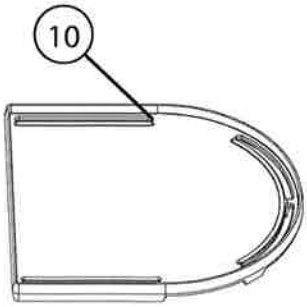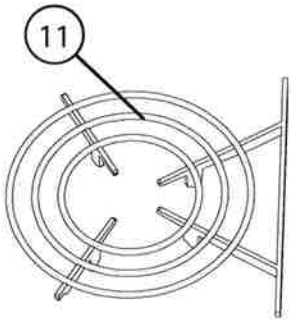
9	2000019873	Grate
10	2000019874	Griddle
11	2000019875	Pan/Pot Support
12	2000012525	Grill Cover (Not Shown)