Ashlyn Double Vanity Specifications

Ashlyn Double Vanity Specifications

For use with a JSG *Oceana* Oasis Rectangle Undermount

- Vanity item# ASH-VAN-DBL-xxx
- 8” Faucet Spread. Deck-mounted faucet required
- Vanity Height: 35”

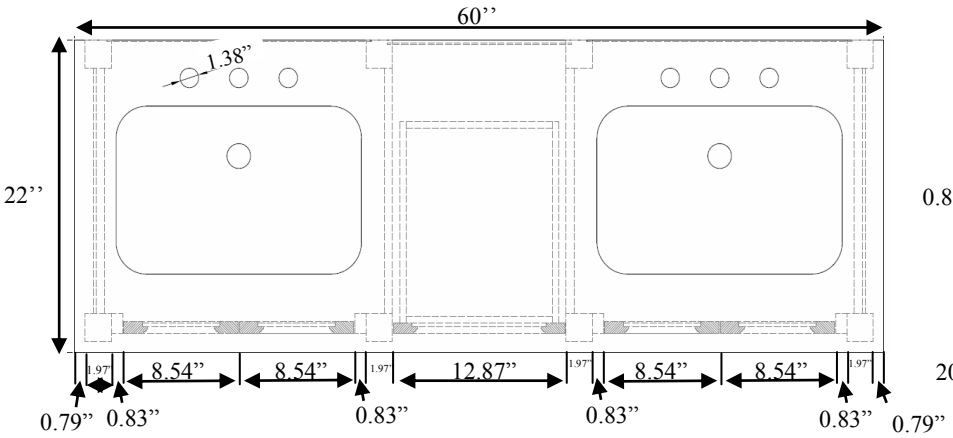

Top View

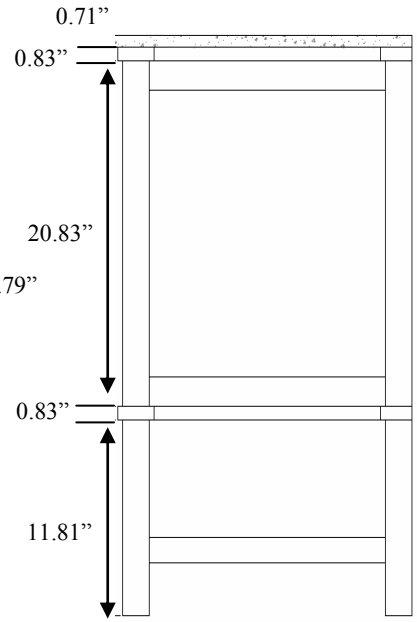

Side View

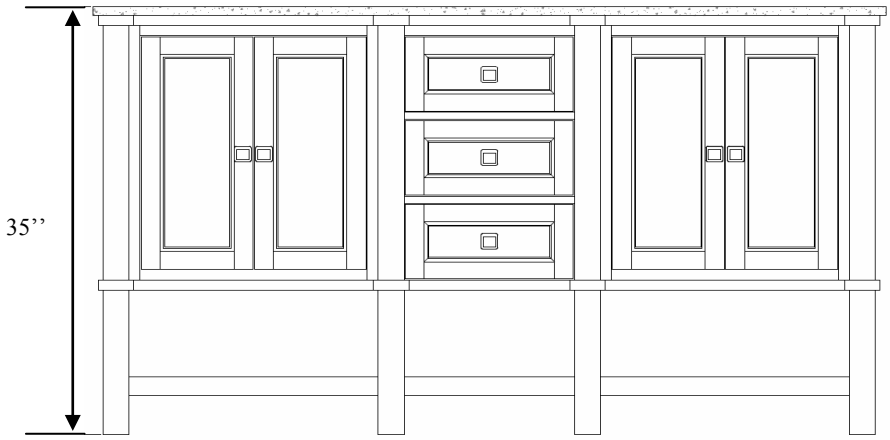

Front View

215 North 4th Street, Jeannette, PA 15644 ph:724.523.5567 fax:724.523.0123 www.jsgoceana.com

Made in the U.S.A.