FREEMOTION®

U8.1

Model No. VMEX81414.1
Serial No. _____

Write the serial number in the space above for reference.

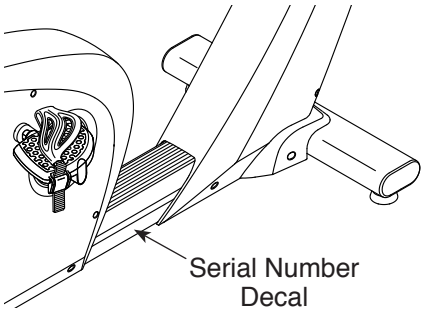

USER'S MANUAL

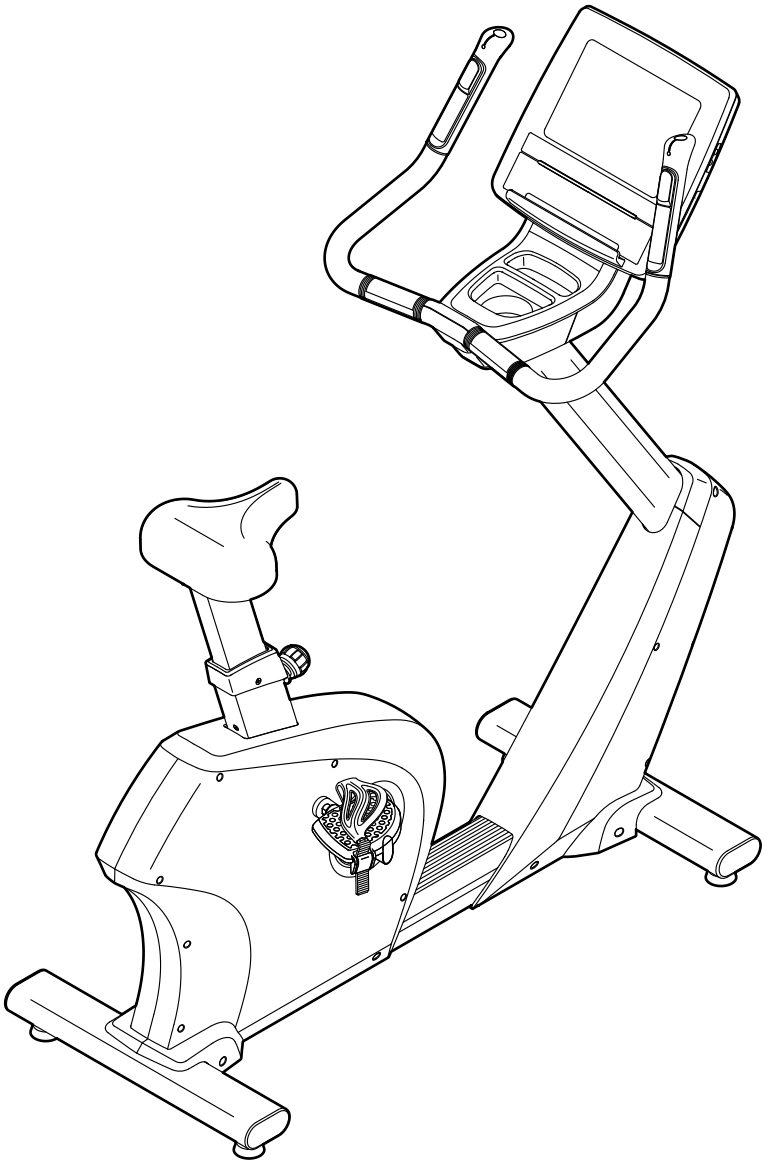

QUESTIONS?

If you have questions, or if parts are damaged or missing, please see HOW TO CONTACT CUSTOMER CARE on the back cover of this manual.

⚠ CAUTION

Read all precautions and instructions in this manual before using this equipment. Keep this manual for future reference.

www.freemotionfitness.com

TABLE OF CONTENTS

WARNING DECAL PLACEMENT 2
IMPORTANT PRECAUTIONS 3
BEFORE YOU BEGIN 4
PART IDENTIFICATION CHART 5
ASSEMBLY 6
HOW TO UPGRADE THE CONSOLE 12
HOW TO USE THE EXERCISE BIKE 13
COMPLIANCE INFORMATION 28
MAINTENANCE AND TROUBLESHOOTING 29
EXERCISE GUIDELINES 30
PART LIST 32
EXPLODED DRAWING 34
HOW TO CONTACT CUSTOMER CARE . . . . . Back Cover
LIMITED WARRANTY . . . . . Back Cover

WARNING DECAL PLACEMENT

This drawing shows the location(s) of the warning decal(s). **If a decal is missing or illegible, see the back cover of this manual and request a free replacement decal. Apply the decal in the location shown.** Note: The decal(s) may not be shown at actual size.

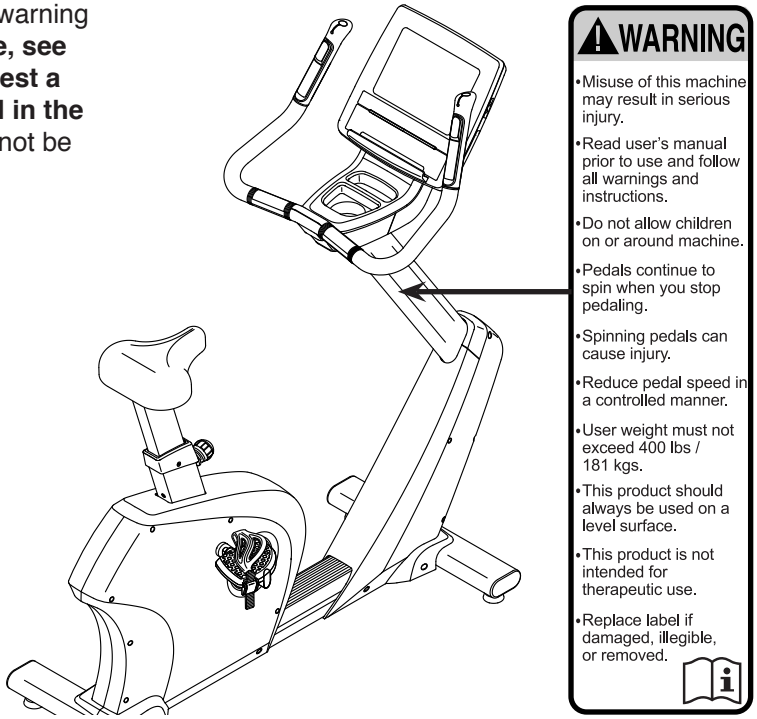

FREEMOTION is a registered trademark of ICON Health & Fitness, Inc.
POLAR is a registered trademark of Polar Electro Oy.

IMPORTANT PRECAUTIONS

⚠WARNING: To reduce the risk of burns, fire, electric shock, or injury to persons, read all important precautions and instructions in this manual and all warnings on your exercise bike before using your exercise bike. FreeMotion Fitness assumes no responsibility for personal injury or property damage sustained by or through the use of this product.

1. It is the responsibility of the owner to ensure that all users of the exercise bike are adequately informed of all precautions.
2. Before beginning any exercise program, consult your physician. This is especially important for persons over age 35 or persons with pre-existing health problems.
3. Use the exercise bike only as described in this manual.
4. Keep the exercise bike indoors, away from moisture and dust. Do not put the exercise bike in a garage or covered patio, or near water.
5. Place the exercise bike on a level surface with at least 2 ft. (0.6 m) of clearance around the exercise bike. To protect the floor or carpet from damage, place a mat under the exercise bike.
6. Inspect and properly tighten all parts regularly. Replace any worn parts immediately.
7. Keep children under age 13 and pets away from the exercise bike at all times.
8. Wear appropriate clothes while exercising; do not wear loose clothes that could become caught on the exercise bike. Always wear athletic shoes for foot protection.
9. The exercise bike should not be used by persons weighing more than 400 lbs. (181 kg).
10. Be careful when mounting and dismounting the exercise bike.
11. The heart rate monitor is not a medical device. Various factors, including the user's movement, may affect the accuracy of heart rate readings. The heart rate monitor is intended only as an exercise aid in determining heart rate trends in general.
12. Always keep your back straight while using the exercise bike; do not arch your back.
13. Over exercising may result in serious injury or death. If you feel faint, if you become short of breath, or if you experience pain while exercising, stop immediately and cool down.

BEFORE YOU BEGIN

Thank you for selecting the revolutionary FREEMOTION® U 8.1 exercise bike. The U 8.1 exercise bike provides an impressive selection of features designed to make your workouts more effective and enjoyable.

For your benefit, read this manual carefully before you use the exercise bike. If you have questions after reading this manual, please see the back cover of this manual. To help us assist you, note the product model number and serial number before contacting us. The model number and the location of the serial number decal are shown on the front cover of this manual.

Before reading further, please familiarize yourself with the parts that are labeled in the drawing below.

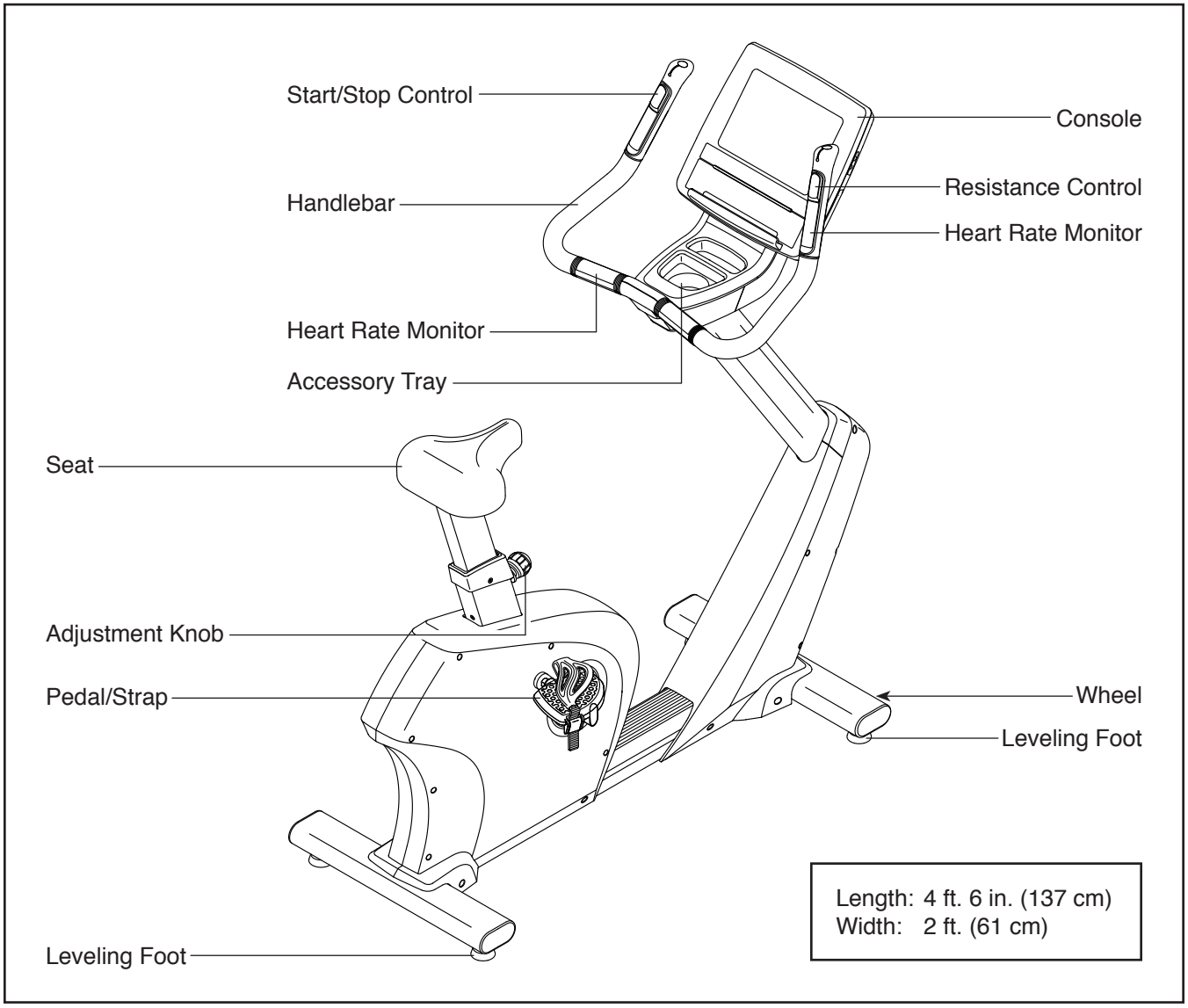

PART IDENTIFICATION CHART

Use the drawings below to identify the small parts needed for assembly. The number in parentheses below each drawing is the key number of the part, from the PART LIST near the end of this manual. The number following the key number is the quantity needed for assembly. **Note: If a part is not in the hardware kit, check to see if it has been preassembled. Extra parts may be included.**

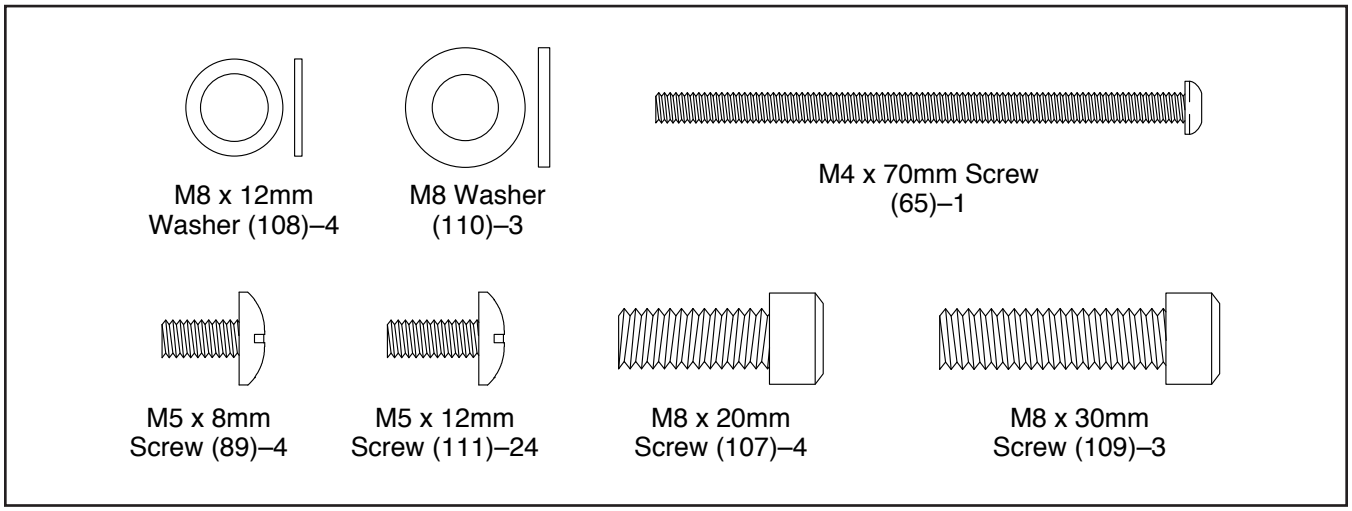

ASSEMBLY

- Assembly requires two persons.
- Place all parts in a cleared area and remove the packing materials. Do not dispose of the packing materials until you finish all assembly steps.
- If a part is not in the hardware kit, check to see if it has been preassembled.
- Left parts are marked “L” or “Left” and right parts are marked “R” or “Right.”
- To identify small parts, see page 5.
- Assembly can be completed using the included tools.

  Assembly may be easier if you have a set of wrenches. To avoid damaging parts, do not use power tools.

1. Have a second person hold the Upright (66) near the Frame (1).

   See the inset drawing. Connect the Upper Main Wire (42) to the Lower Main Wire (69), connect the Upper Power Wire (63) to the Lower Power Wire (64), and connect the Upper TV Coaxial Cable (68) to the Lower TV Coaxial Cable (67).

   See the inset drawing. Locate the covers (A, B) on the Lower TV Coaxial Cable (67) and on the Upper TV Coaxial Cable (68). Slide the covers together and **push the small cover (A) into the large cover (B).**

   Then, insert the excess wire into the Upright (66).

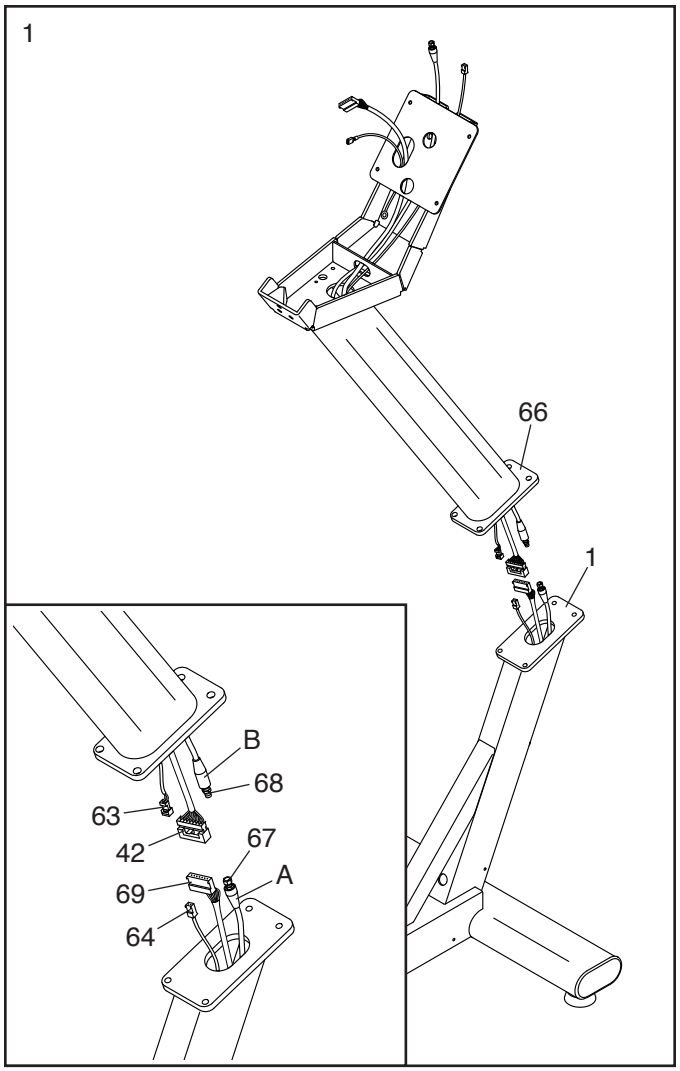

2. **Tip: Avoid pinching the wires.** Attach the Upright (66) to the Frame (1) with four M8 x 20mm Screws (107) and four M8 x 12mm Washers (108); **start all the Screws, and then tighten them.**

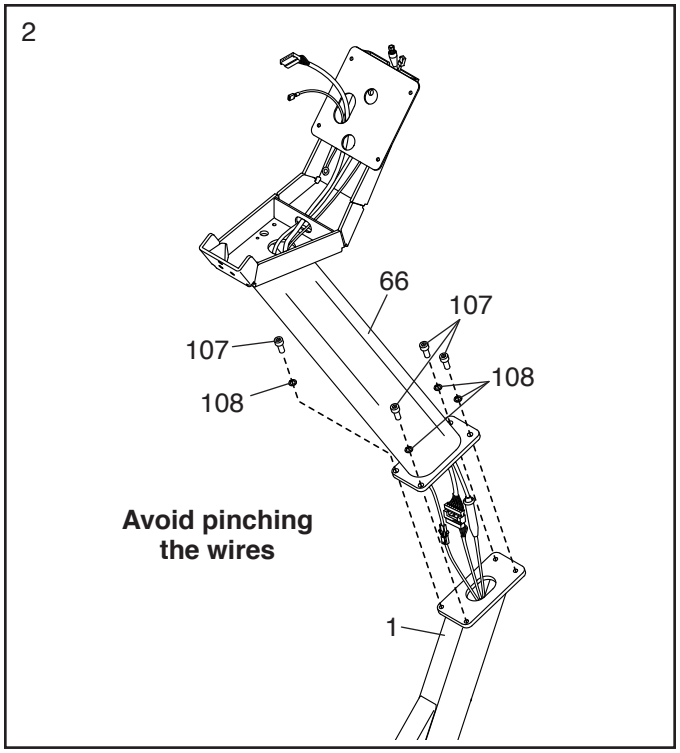

3. Loosen the Adjustment Knob (35) and pull it outward. Then, insert the Seat Post (84) into the Frame (1), and release the Adjustment Knob. **Move the Seat Post upward or downward slightly to make sure that the Adjustment Knob is engaged in one of the adjustment holes in the Seat Post.** Then, tighten the Seat Post Knob.

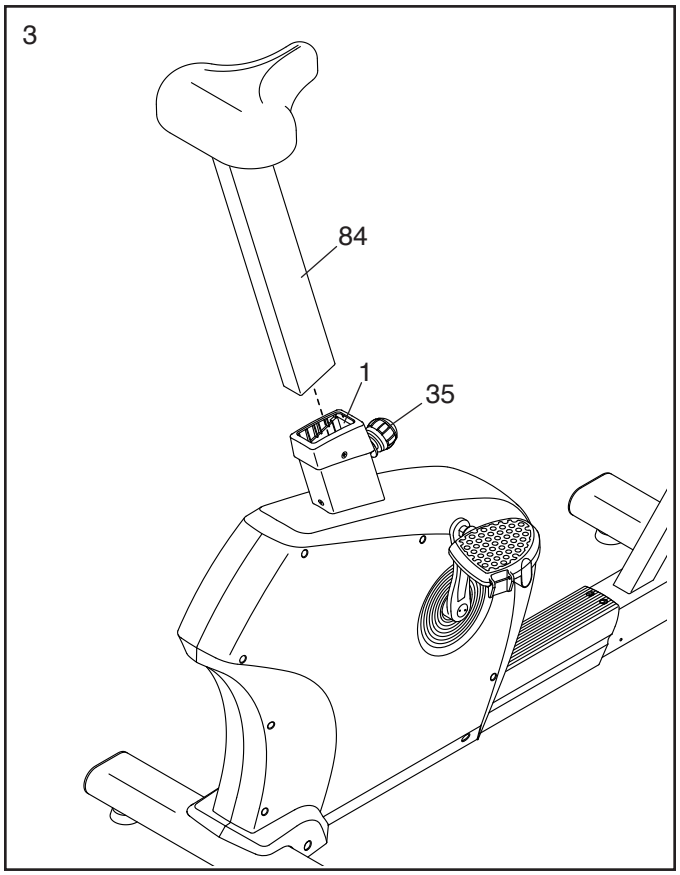

4. Hold the Left and Right Front Shields (101, 102) together around the Frame (1).

   Attach the Left and Right Front Shields (101, 102) with ten M5 x 12mm Screws (111); **start all the Screws, and then tighten them.**

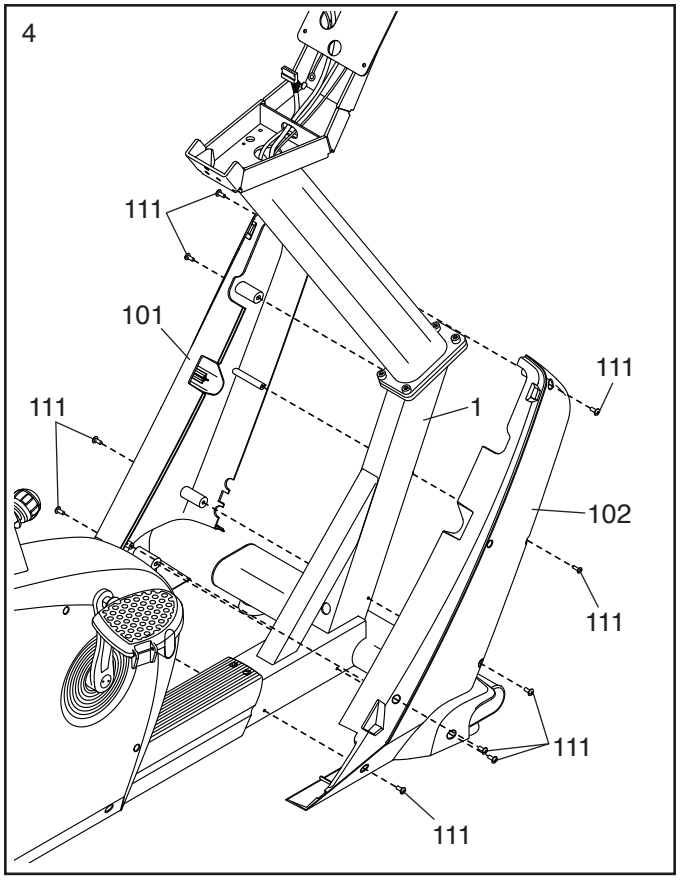

5. Hold the Front Shield Cover (104) and the Front Top Cover (103) together around the Upright (66).

   Tip: Be careful not to drop a screw between the Left and Right Front Shields (101, 102).

   Attach the Front Top Cover (103) to the Front Shield Cover (104) with two M5 x 12mm Screws (111); **start both Screws, and then tighten them.**

   Then, press the Front Top Cover (103) and Front Shield Cover (104) into the Left and Right Front Shields (101, 102).

   Attach the Front Shield Cover (104) to the Left and Right Front Shields (101, 102) with an M4 x 70mm Screw (65).

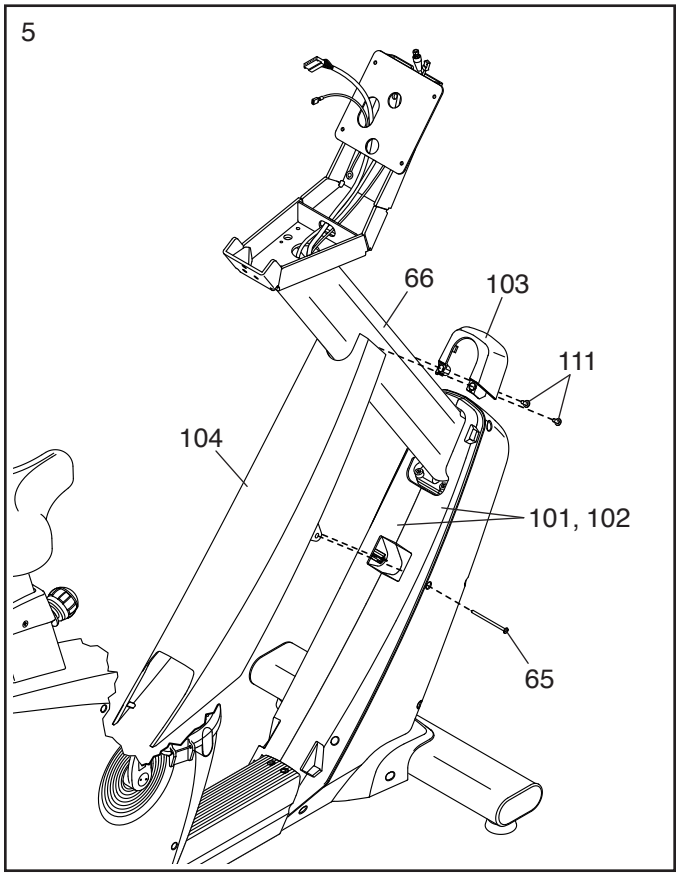

6. **Tip: Avoid pinching the wires.** Attach the Handlebar (70) to the Upright (66) with three M8 x 30mm Screws (109) and three M8 Washers (110); **start all the Screws, and then tighten them.**

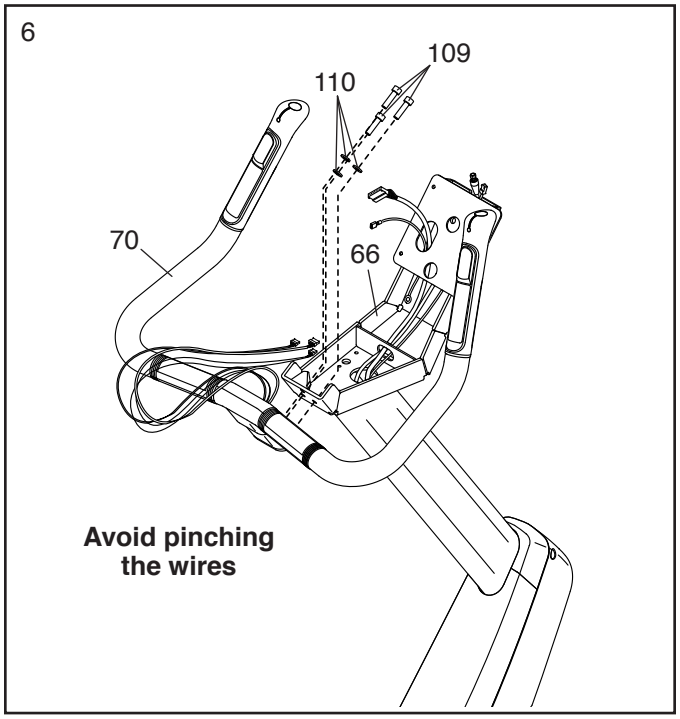

7. Route the Left and Right Control Key Wires (81, 82) and the Pulse Sensor Wire (83) in the Handlebar (70) through the Upright (66) as shown.

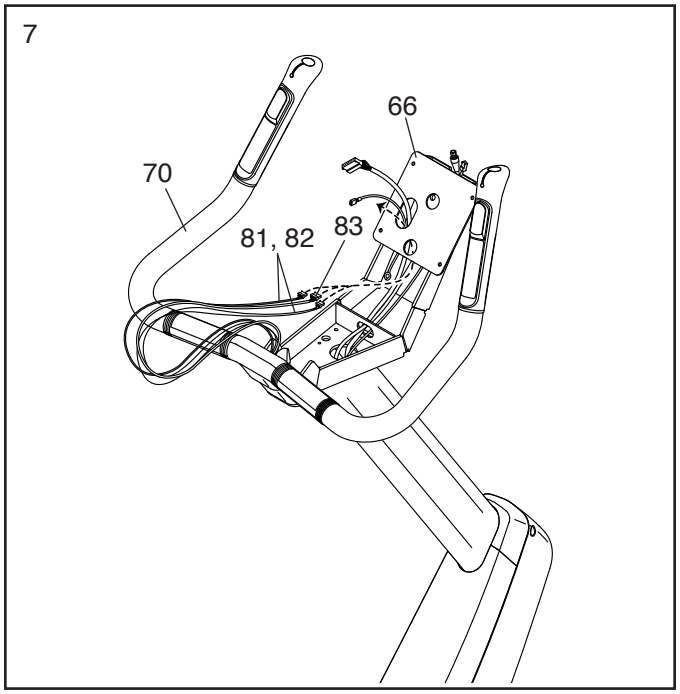

8. Have a second person hold the Console (106) near the Upright (66).

   Connect the wires on the Console (106) to the Upper Main Wire (42), the Pulse Sensor Wire (83), the Left and Right Control Key Wires (81, 82), and the Ground Wire (138).

   Insert the excess wire into the Upright (66).

   Note: The Upper TV Coaxial Cable (68) and the Upper Power Wire (63) will not be used unless you purchase the optional digital TV.

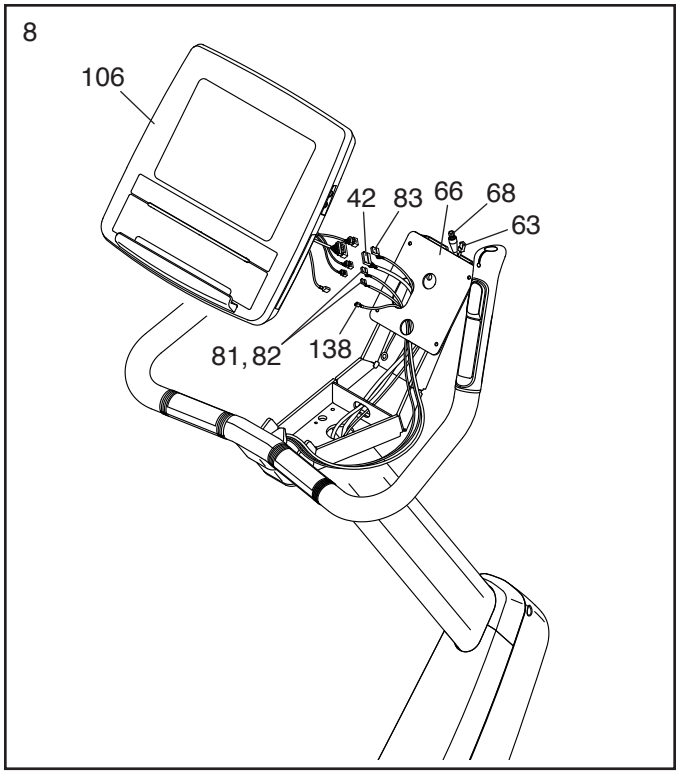

9. **IMPORTANT: Arrange the wires (C) from the Handlebar (70) in and alongside the Upright (66) as shown.**

   Tip: Avoid pinching the wires. Attach the Console (106) to the Upright (66) with four M5 x 8mm Screws (89); **start all the Screws, and then tighten them.**

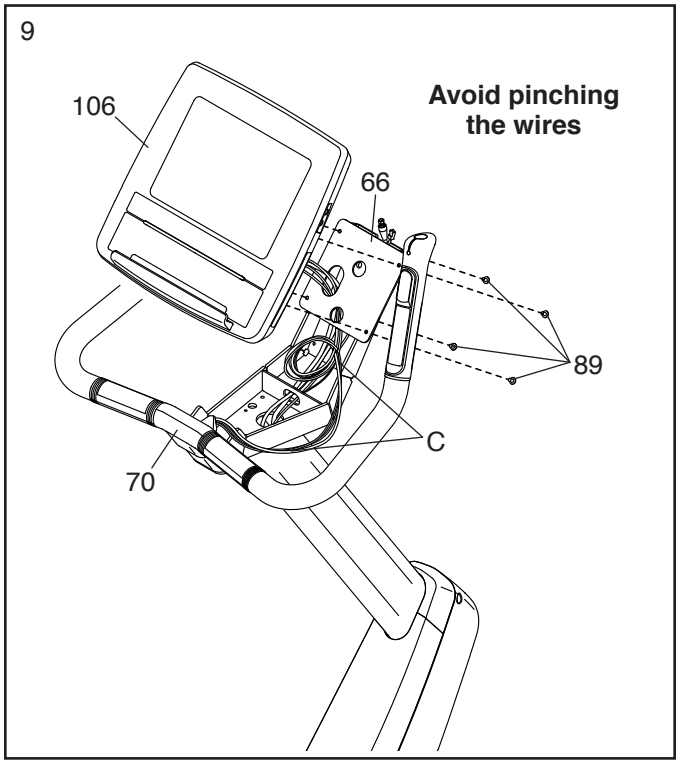

10. **Tip: To avoid pinching the wires, make sure that the wires (C) from the Handlebar (70) are arranged as shown.**

Attach the Accessory Tray (99) to the Upright (66) with two M5 x 12mm Screws (111); **start both Screws, and then tighten them.**

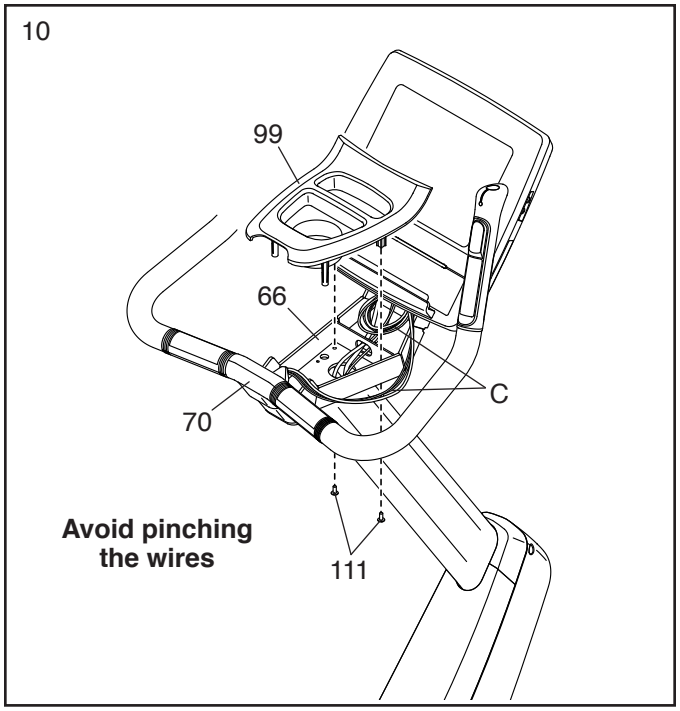

11. **Tip: Avoid pinching the wires.** Attach the Rear Upright Cover (100) to the Accessory Tray (99) and to the Upright (66) with four M5 x 12mm Screws (111); **start all the Screws, and then tighten them.**

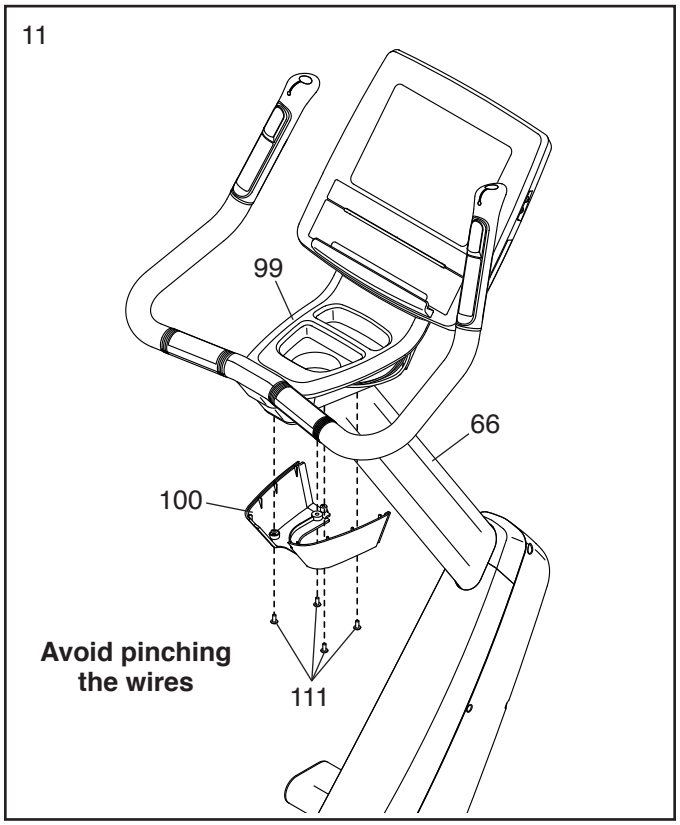

12. **Tip: Avoid pinching the wires.** Attach the Front Upright Cover (98) to the Rear Upright Cover (100) and to the Upright (66) with six M5 x 12mm Screws (111); **start all the Screws, and then tighten them.**

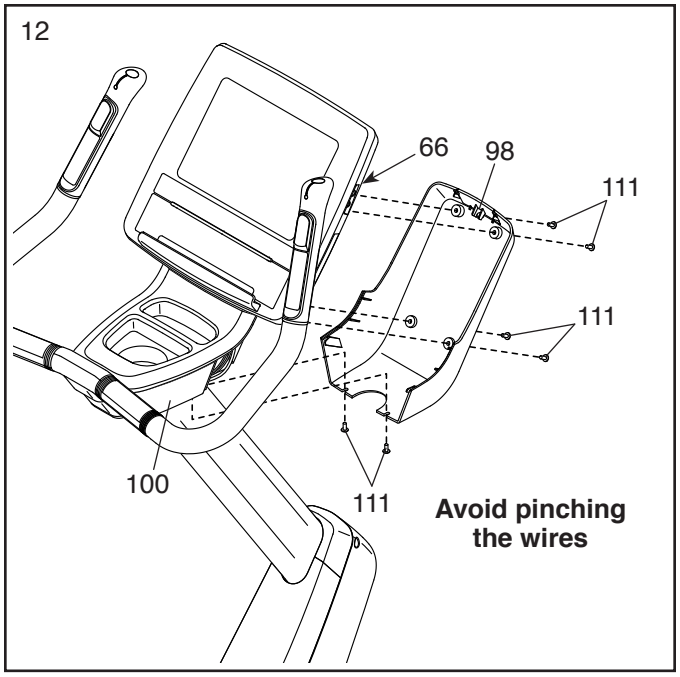

13. **After the exercise bike is assembled, inspect it to make sure that it is assembled correctly and that it functions properly. Make sure that all parts are properly tightened before you use the exercise bike.** Extra parts may be included. Place a mat under the exercise bike to protect the floor or carpet.

HOW TO UPGRADE THE CONSOLE

Your console has been preconfigured to operate with an optional digital TV.

To learn about the features of the basic console, see page 15. **To learn about the features of the digital TV,** see the user's manual included with the digital TV. The basic console has no television capabilities.

To upgrade your console to include a digital TV whenever you choose, please see the back cover of this manual.

HOW TO USE THE EXERCISE BIKE

HOW TO PLUG IN THE INCLUDED POWER ADAPTER

The exercise bike can be used with or without the included power adapter. When the exercise bike is used without the power adapter, power will be supplied by an internal generator.

IMPORTANT: If the exercise bike has been exposed to cold temperatures, allow it to warm to room temperature before you plug in the power adapter. If you do not do this, you may damage the console displays or other electronic components.

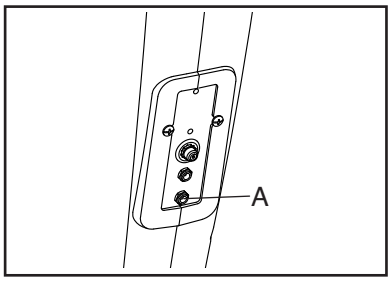

Plug the power adapter into the **lower** power receptacle (A) on the frame of the exercise bike. Then, plug the power adapter into an appropriate outlet that is properly installed in accordance with all local codes and ordinances.

HOW TO PLUG IN THE DIGITAL TV POWER ADAPTER

If the exercise bike has an optional digital TV, the power adapter included with the digital TV must be used for the digital TV to operate.

IMPORTANT: If the exercise bike has been exposed to cold temperatures, allow it to warm to room temperature before you plug in the power adapter. If you do not do this, you may damage the console displays or other electronic components.

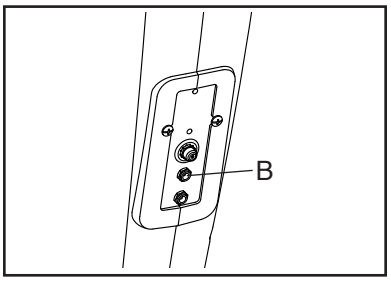

Plug the power adapter for the optional digital TV into the **upper** digital TV power receptacle (B) on the frame of the exercise bike. Then, plug the power adapter into an appropriate outlet that is properly installed in accordance with all local codes and ordinances.

HOW TO CONNECT A COAXIAL CABLE TO THE EXERCISE BIKE

If the exercise bike has an optional digital TV, a coaxial cable must be connected to the exercise bike for cable or over-the-air TV stations to be viewed.

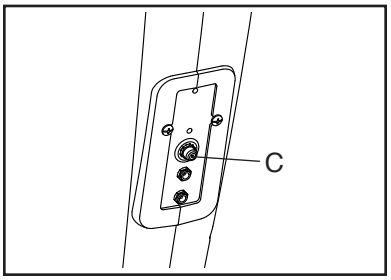

Locate the coaxial cable terminal (C) on the frame of the exercise bike. Connect the coaxial cable to the coaxial cable terminal. Route the coaxial cable so that it will not be pinched or crushed by the exercise bike.

A satellite receiver, VCR, or DVD player can also be connected to the exercise bike. Connect a coaxial cable from the coaxial output on your equipment (usually labeled TV OUT or RF OUT) to the coaxial cable terminal (C) on the frame of the exercise bike.

Note: Audio/video equipment without coaxial outputs may be able to be connected directly to the optional digital TV; the optional digital TV has a variety of input receptacles.

WARRANTY INFORMATION

The warranty for this product does not cover damage or equipment failure caused by electric wiring not in compliance with electrical codes or the specifications in this manual, or failure to provide reasonable and necessary maintenance as outlined in this manual. Any failure or damage caused by unauthorized service; misuse; accident; negligence; improper assembly or installation; debris resulting from any destruction activities in the product's environment; rust or corrosion as a result of the product's location; alterations or modifications without written authorization; or failure on your part to use, operate, and maintain the product as set forth in this manual will void the warranty.

All terms of the warranty are void if this product is moved beyond the continental borders of the United States of America (excluding Alaska, Hawaii, and Canada) and are then subject to the terms provided by that country's local authorized FreeMotion Fitness, Inc. representative.

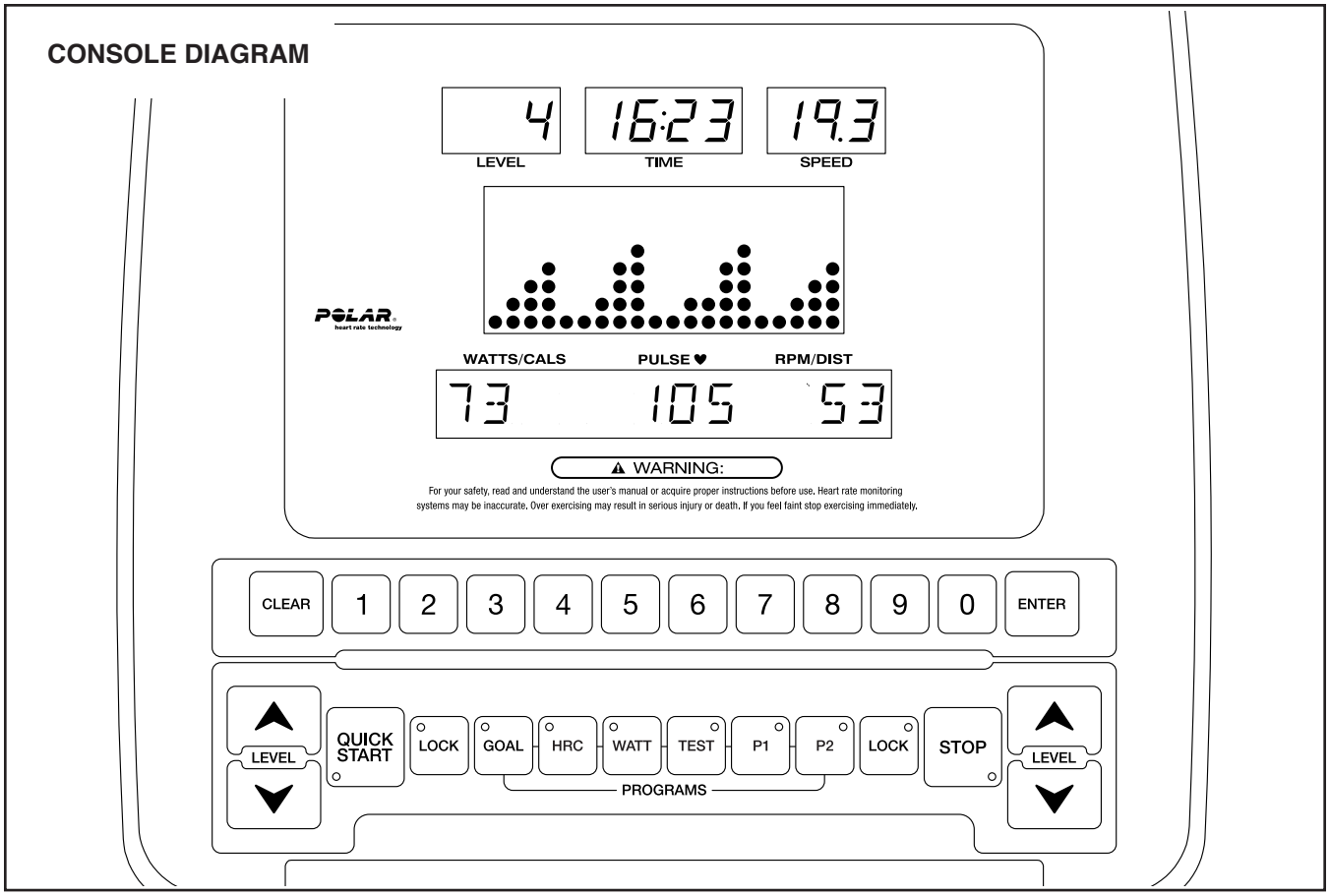

FEATURES OF THE CONSOLE

The console offers an impressive array of features designed to make your workouts more effective and enjoyable.

The console features a selection of onboard programs. Some programs automatically control the resistance of the pedals while guiding you through an effective exercise session. Other programs allow you to set customized workout goals or test your fitness level.

When you use the quick start mode, you can change the resistance of the pedals with the touch of a button.

As you exercise, the console will display instant exercise feedback. You can also measure your heart rate using the handgrip heart rate monitor or a Polar®-compatible chest heart rate monitor.

You can also use the charging port on the console to charge your USB-compatible device while you exercise.

To activate the console, see page 16. **To turn off the console,** see page 16. **To use the charging port,** see page 16.

To use the quick start mode, see page 16. **To use an onboard program,** see page 19. **To use the goal program,** see page 20. **To use the heart rate control program,** see page 22. **To use the watts program,** see page 24. **To use the fitness test,** see page 25. **To change console settings,** see page 27.

Note: If there is a sheet of plastic on the display, remove the plastic.

Note: The console can display speed and distance in either miles and miles per hour or kilometers and kilometers per hour. To find which unit of measurement is selected, see step 4 on page 27.

HOW TO ACTIVATE THE CONSOLE

If the exercise bike has a basic console, it can be used with or without the power adapter.

To use the exercise bike without the power adapter, simply begin pedaling. The displays and indicators will light, a tone will sound, and the words SELECT PROGRAM OR QUICK START will scroll across the lower displays.

While you pedal, power will be supplied by an internal generator; remember to continue pedaling while using the exercise bike.

If the exercise bike has an optional digital TV, the power adapter must be used for the digital TV to operate. See HOW TO PLUG IN THE DIGITAL TV POWER ADAPTER on page 13.

When the power adapter is plugged in, the displays and indicators will light, a tone will sound, and the words SELECT PROGRAM OR QUICK START will scroll across the lower displays.

HOW TO TURN OFF THE CONSOLE

If the pedals are not moved and no buttons are pressed for a short while, the console will turn off automatically.

If the exercise bike is being used with the power adapter, unplug the power adapter when you are finished exercising. **IMPORTANT: If you do not do this, the electrical components on the exercise bike may wear prematurely.**

HOW TO USE THE CHARGING PORT

The console features a charging port that you can use to charge USB-compatible devices, such as smartphones, while you exercise.

To use the charging port, plug a USB charging cable (not included) into the charging port on the side of the console and into the receptacle on your device; **make sure that the USB charging cable is fully plugged in.** Note: The charging port cannot be used to view or transfer data or to play music through the console sound system.

HOW TO USE THE QUICK START MODE

1. **Turn on the console.**

   See HOW TO ACTIVATE THE CONSOLE at the left.

2. **Select the quick start mode.**

   To select the quick start mode, press the Quick Start button on the console or press the Start button on the left handlebar.

3. **Change the resistance of the pedals as desired.**

   As you pedal, you can change the resistance of the pedals. To change the resistance level, press the Level increase and decrease buttons on the console or on the right handlebar.

   Note: After you press a button, it will take a moment for the pedals to reach the selected resistance level.

4. **Follow your progress.**

   The displays can show the following workout information:

   Matrix—This display will show a profile of the resistance levels of the workout or program. This display will also show a variety of text messages.

   Message Banner—This display will show a variety of scrolling text messages.

   Level—This display will show the resistance level of the pedals.

   Time—This display will show the workout time. When the quick start mode is selected, this display will show the elapsed time. When a program is selected, this display will show the time remaining in the program.

Speed—This display will show your pedaling speed in miles or kilometers per hour.

Note: The console can display speed in either miles per hour or kilometers per hour. To find which unit of measurement is selected, see step 4 on page 27.

Watts/Cals—This display will show your power output in watts and the approximate number of calories you have burned in a repeating cycle.

Pulse—This display will show your heart rate when you use the handgrip heart rate monitor or a Polar-compatible chest heart rate monitor (see step 5).

RPM/Dist—This display will show your pedaling speed in revolutions per minute (RPM) and the distance that you have pedaled in miles or kilometers.

Note: The console can display distance in either miles or kilometers. To find which unit of measurement is selected, see step 4 on page 27.

To lock or unlock the workout information shown in the lower displays, press either Lock button repeatedly.

When the lower displays are locked, the indicator on the Lock button will light and only the selected workout information will be shown.

When the lower displays are unlocked, the workout information will be shown in a repeating cycle.

5. **Measure your heart rate if desired.**

You can wear a Polar-compatible chest heart rate monitor (not included) or you can use the handgrip heart rate monitor to measure your heart rate.

IMPORTANT: If you use both heart rate monitors at the same time, the console will not display your heart rate accurately.

To use the handgrip heart rate monitor, follow the instructions below.

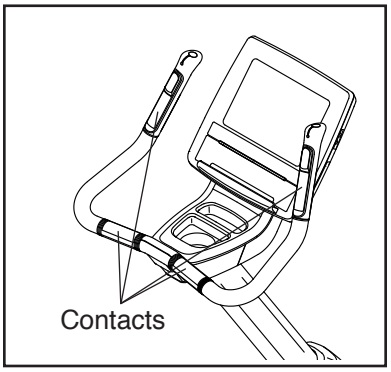

If there are sheets of plastic on the metal contacts on the handgrip heart rate monitor, remove the plastic. To measure your heart rate, hold the handgrip heart rate monitor with your palms resting against the contacts. **Avoid moving your hands or gripping the contacts tightly.**

When your pulse is detected, your heart rate will be shown in the display. **For the most accurate heart rate reading, hold the contacts for at least 15 seconds.**

If the display does not show your heart rate, make sure that your hands are positioned as described. Be careful not to move your hands excessively or to squeeze the contacts tightly. For optimal performance, clean the contacts using a soft cloth; **never use alcohol, abrasives, or chemicals to clean the contacts.**

6. **Pause the workout if desired.**

   To pause the workout, press the Stop button on the console or on the left handlebar. Note: If the pedals are not moved and no buttons are pressed for a short while, the console will exit the quick start mode or the program.

   To resume the workout, press the Quick Start button on the console or the Start button on the left handlebar.

7. **End the workout and view the workout summary.**

   When you are finished exercising, press the Stop button on the console or on the left handlebar twice.

   The workout summary will appear in the lower displays in a repeating cycle. The following information will be shown:

   Exercise Time—This display will show your total workout time in hours, minutes, and seconds (HHMMSS).

   Distance Covered—This display will show the total distance that you pedaled in miles (ML) or kilometers (KM).

   Average Speed—This display will show your average pedaling speed in miles per hour (MLH) or kilometers per hour (KMH).

   Calories Burned—This display will show the approximate total number of calories (KCAL) you burned.

   Average Watts—This display will show your average power output in watts.

   Average METs—This display will show your approximate energy expenditure in METs (metabolic equivalent).

8. **Exit the workout summary.**

   To exit the workout summary, press the Stop button.

   Note: After a short while, the console will exit the workout summary automatically.

9. **Turn off the console.**

   See HOW TO TURN OFF THE CONSOLE on page 16.

HOW TO USE AN ONBOARD PROGRAM

1. **Turn on the console.**

   See HOW TO ACTIVATE THE CONSOLE on page 16.

2. **Select a program.**

   To select a program, first press the P1 or P2 button. Next, press the Level increase and decrease buttons until the desired profile appears in the matrix. Then, press the Enter button.

3. **Enter your weight.**

   The words ENTER WEIGHT will scroll across the lower displays. Press the numbered buttons to enter your weight. If necessary, press the Clear button to cancel your entry. When your weight is entered, press the Enter button.

4. **Enter a program time.**

   The words ENTER TIME will scroll across the lower displays. Press the numbered buttons to enter the desired program time. If necessary, press the Clear button to cancel your entry. When the program time is entered, press the Enter button. The program will then begin.

5. **Begin exercising.**

   The program is divided into segments. One resistance level is programmed for each segment. Note: The same resistance level may be programmed for consecutive segments.

   During the program, the profile in the matrix will show your progress. The flashing segment of the profile represents the current segment of the program. The height of the flashing segment indicates the resistance level for the current segment.

   If the resistance level is too high or too low, you can manually override the resistance level by pressing the Level increase and decrease buttons.

   The program will continue in this way until the last segment ends.

6. **Follow your progress.**

   See step 4 on page 16.

7. **Measure your heart rate if desired.**

   See step 5 on page 17.

8. **Pause the workout if desired.**

   See step 6 on page 18.

9. **End the workout and view the workout summary.**

   See step 7 on page 18.

10. **Exit the workout summary.**

    See step 8 on page 18.

11. **Turn off the console.**

    See HOW TO TURN OFF THE CONSOLE on page 16.

HOW TO USE THE GOAL PROGRAM

1. **Turn on the console.**

   See HOW TO ACTIVATE THE CONSOLE on page 16.

2. **Select the goal program.**

   To select the goal program, press the Goal button.

3. **Select a goal type.**

   The words TIME, DISTANCE, and CALORIES will scroll across the lower displays. Press the 1 button to select a time goal, press the 2 button to select a distance goal, or press the 3 button to select a calories goal. Then, press the Enter button.

4. **Enter your age.**

   The words ENTER AGE will scroll across the lower displays. Press the numbered buttons to enter your age. If necessary, press the Clear button to cancel your entry. When your age is entered, press the Enter button.

5. **Enter your weight.**

   The words ENTER WEIGHT will scroll across the lower displays. Press the numbered buttons to enter your weight. If necessary, press the Clear button to cancel your entry. When your weight is entered, press the Enter button.

6. **Enter your desired goal.**

   If you selected a time goal, the words ENTER TIME will scroll across the lower displays. Press the numbered buttons to enter your desired time goal. If necessary, press the Clear button to cancel your entry. When your time goal is entered, press the Enter button. The program will then begin.

   If you selected a distance goal, the words ENTER DISTANCE will scroll across the lower displays. Press the numbered buttons to enter your desired distance goal. If necessary, press the Clear button to cancel your entry. When your distance goal is entered, press the Enter button. The program will then begin.

   If you selected a calories goal, the words ENTER CALORIES will scroll across the lower displays. Press the numbered buttons to enter your desired calories goal. If necessary, press the Clear button to cancel your entry. When your calories goal is entered, press the Enter button. The program will then begin.

   Note: The calorie goal is an estimate of the number of calories that you will burn during the workout. The actual number of calories that you burn will depend on various factors, such as your weight.

7. **Begin exercising and change the resistance of the pedals as desired.**

   The program is divided into segments. During the program, the profile in the matrix will show your progress. The flashing segment of the profile represents the current segment of the program. The height of the flashing segment indicates the resistance level for the current segment.

   As you exercise, change the resistance of the pedals as desired (see step 3 on page 16.)

   The program will continue in this way until the last segment ends.

8. **Follow your progress.**

   If you selected a time goal, the time display will count down until your time goal is reached.

   If you selected a distance goal, the distance display will count down until your distance goal is reached.

   If you selected a calories goal, the calories display will count down until your calories goal is reached.

   See step 4 on page 16.

9. **Measure your heart rate if desired.**

   See step 5 on page 17.

10. **Pause the workout if desired.**

    See step 6 on page 18.

11. **End the workout and view the workout summary.**

    See step 7 on page 18.

12. **Exit the workout summary.**

    See step 8 on page 18.

13. **Turn off the console.**

    See HOW TO TURN OFF THE CONSOLE on page 16.

HOW TO USE THE HEART RATE CONTROL PROGRAM

1. **Turn on the console.**

   See HOW TO ACTIVATE THE CONSOLE on page 16.

2. **Wear a Polar-compatible chest heart rate monitor.**

   For the most accurate heart rate readings, it is recommended that you wear a Polar-compatible chest heart rate monitor when using the heart rate control (HRC) program.

   You can also hold the handgrip heart rate monitor during the heart rate control program.

3. **Select the heart rate control program.**

   To select the heart rate control program, press the HRC button. Then, press the Enter button.

4. **Select the desired heart rate target.**

   The heart rate control program has several heart rate targets, which are percentages of your maximum heart rate.

   Note: Your maximum heart rate is estimated by subtracting your age from 220. For example, if you are 30 years old, your estimated maximum heart rate is 190 beats per minute (220 – 30 = 190). Therefore, if you are 30 years old, a target heart rate setting of 60 percent is equal to 114 beats per minute (60 percent of 190 is 114). To determine a target heart rate that is suitable for you, consult your physician or a physician-recommended source.

   Press the Level increase and decrease buttons until the desired heart rate target appears in the matrix. Then, press the Enter button.

5. **Enter your age.**

   The words ENTER AGE will scroll across the lower displays. Press the numbered buttons to enter your age. If necessary, press the Clear button to cancel your entry. When your age is entered, press the Enter button.

6. **Enter a program time.**

   The words ENTER TIME will scroll across the lower displays. Press the numbered buttons to enter the desired program time. If necessary, press the Clear button to cancel your entry. When the program time is entered, press the Enter button. The program will then begin.

7. **Begin exercising.**

   The program is divided into segments. During the program, the profile in the matrix will show your progress. The flashing segment of the profile represents the current segment of the program. The height of the flashing segment indicates the resistance level for the current segment.

   During the program, the console will regularly compare your actual heart rate with the heart rate target.

   To keep you actual heart rate near the heart rate target, the console will automatically adjust the resistance of the pedals. The console may also prompt you to increase your pedaling speed. **When an upward pointing arrow appears in the matrix,** increase your pedaling speed.

   IMPORTANT: The heart rate target is intended only to provide motivation. Make sure to exercise at an intensity that is comfortable for you.

IMPORTANT: You cannot adjust the resistance of the pedals manually during the heart rate control program.

The program will continue in this way until the last segment ends.

8. **Follow your progress.**

   See step 4 on page 16.

9. **Pause the workout if desired.**

   See step 6 on page 18.

10. **End the workout and view the workout summary.**

    See step 7 on page 18.

11. **Exit the workout summary.**

    See step 8 on page 18.

12. **Turn off the console.**

    See HOW TO TURN OFF THE CONSOLE on page 16.

HOW TO USE THE WATTS PROGRAM

1. **Turn on the console.**

   See HOW TO ACTIVATE THE CONSOLE on page 16.

2. **Select the watts program.**

   To select the watts program, press the Watt button. Then, press the Enter button.

3. **Enter the desired watts target.**

   The words ENTER WATT will scroll across the lower displays. Press the numbered buttons to enter the desired watts target. If necessary, press the Clear button to cancel your entry. When your watts target is entered, press the Enter button.

4. **Enter a program time.**

   The words ENTER TIME will scroll across the lower displays. Press the numbered buttons to enter the desired program time. If necessary, press the Clear button to cancel your entry. When the program time is entered, press the Enter button. The program will then begin.

5. **Begin exercising.**

   The program is divided into segments. During the program, the profile in the matrix will show your progress. The flashing segment of the profile represents the current segment of the program. The height of the flashing segment indicates the resistance level for the current segment.

   To keep your actual watts output near the watts target, the console will automatically adjust the resistance of the pedals and prompt you to increase or decrease your pedaling speed. **When an upward pointing arrow appears in the matrix,** increase your pedaling speed; **when a downward pointing arrow appears,** decrease your pedaling speed.

   IMPORTANT: The watts target is intended only to provide motivation. Make sure to exercise at an intensity that is comfortable for you.

   If the resistance level is too high or too low, you can manually override the resistance level by pressing the Level increase and decrease buttons. **IMPORTANT: The resistance level will automatically adjust at the end of each segment.**

   The program will continue in this way until the last segment ends.

6. **Follow your progress.**

   See step 4 on page 16.

7. **Measure your heart rate if desired.**

   See step 5 on page 17.

8. **Pause the workout if desired.**

   See step 6 on page 18.

9. **End the workout and view the workout summary.**

   See step 7 on page 18.

10. **Exit the workout summary.**

    See step 8 on page 18.

11. **Turn off the console.**

    See HOW TO TURN OFF THE CONSOLE on page 16.

HOW TO USE THE FITNESS TEST

1. **Turn on the console.**

   See HOW TO ACTIVATE THE CONSOLE on page 16.

2. **Wear a Polar-compatible chest heart rate monitor.**

   For the most accurate heart rate readings, it is recommended that you wear a Polar-compatible chest heart rate monitor when using the fitness test.

   You can also hold the handgrip heart rate monitor during the fitness test.

3. **Select the fitness test.**

   To select the fitness test, press the Test button.

4. **Select your gender.**

   Press the Level increase and decrease buttons until the appropriate gender symbol appears in the matrix. Then, press the Enter button.

5. **Enter your age.**

   The words ENTER AGE will scroll across the lower displays. Press the numbered buttons to enter your age. If necessary, press the Clear button to cancel your entry. When your age is entered, press the Enter button. The fitness test will then begin.

6. **Begin exercising.**

   The fitness test is divided into segments. During the fitness test, the profile in the matrix will show your progress. The flashing segment of the profile represents the current segment of the fitness test. The height of the flashing segment indicates the resistance level for the current segment.

   During the fitness test, the console will automatically adjust the resistance of the pedals.

   IMPORTANT: You cannot adjust the resistance of the pedals manually during the fitness test.

   The program will continue in this way until the last segment ends.

7. **Follow your progress.**

   See step 4 on page 16.

8. **Pause the workout if desired.**

   See step 6 on page 18.

9. **View the test result and the workout summary.**

   The test result will appear in the matrix. See the FITNESS TEST RESULTS CHARTS on page 26 to assess the test result.

   Then, the workout summary will appear in the lower displays (see step 7 on page 18).

10. **Exit the workout summary.**

    See step 8 on page 18.

11. **Turn off the console.**

    See HOW TO TURN OFF THE CONSOLE on page 16.

FITNESS TEST RESULTS CHARTS

Male Test

Result	5	4	3	2	1
	Excellent	Good	Average	Fair	Poor

Female Test

Result	5	4	3	2	1
	Excellent	Good	Average	Fair	Poor

HOW TO CHANGE CONSOLE SETTINGS

1. **Turn on the console.**

   See HOW TO ACTIVATE THE CONSOLE on page 16.

2. **Select the settings menu.**

   To select the settings menu, press and hold the Clear button and the 0 button for several seconds.

3. **Learn to navigate the settings menus.**

   To select a menu option, first press the Level increase and decrease buttons until the desired menu option appears in the lower displays. Then, press the Enter button to select the menu option; the current setting for the menu option will appear in the displays.

   To change the setting for the selected menu option, press the Level increase and decrease buttons until the desired setting appears in the displays. Then, press the Enter button to select the setting and return to the settings menu.

4. **Change settings as desired.**

   The following settings can be changed:

   Language—The selected language will appear in the displays. The console will display text messages in the selected language.

   Sleep Mode—The selected sleep mode setting will appear in the displays. To have the console stay on continuously, select ON. To have the console turn off when the pedals are not moved and no buttons are pressed for a short while, select OFF.

   Units—The selected unit of measurement will appear in the displays. To view distance and speed in miles and miles per hour, select ENGLISH. To view distance and speed in kilometers and kilometers per hour, select METRIC.

   Note: Other settings may appear in the settings menu; however, it is not recommended that these settings be changed.

5. **Exit the settings menu.**

   To exit the settings menu, press the Stop button.

COMPLIANCE INFORMATION

UNITED STATES

FCC Statement. This equipment has been tested and found to comply with the limits for a Class B digital device, pursuant to Part 15 of the FCC Rules. These limits are designed to provide reasonable protection against harmful interference in a residential installation. This equipment generates, uses, and can radiate radio frequency energy and, if not installed and used in accordance with the instructions, may cause harmful interference to radio communications. However, there is no guarantee that interference will not occur in a particular installation. If this equipment does cause harmful interference to radio or television reception, which can be determined by turning the equipment off and on, try to correct the interference by one or more of the following measures:

- Reorient or relocate the receiving antenna.
- Increase the separation between the equipment and the receiver.
- Connect the equipment into an outlet on a circuit different from that to which the receiver is connected.
- Consult the dealer or an experienced radio/TV technician for help.

FCC CAUTION: To assure continued compliance, use only shielded interface cables when connecting to computer or peripheral devices. Changes or modifications not expressly approved by the party responsible for compliance could void the user's authority to operate this equipment.

CANADA

IC Statement. This Class B digital device complies with Canadian ICES-003. Operation is subject to the following two conditions: (1) This device may not cause harmful interference, and (2) this device must accept any interference received, including interference that may cause undesired operation.

MAINTENANCE AND TROUBLESHOOTING

MAINTENANCE

Regular maintenance is important for optimal performance and to reduce wear. Inspect and properly tighten all parts each time the exercise bike is used. Replace any worn parts immediately.

To clean the exercise bike, use a damp cloth and a small amount of mild soap. **IMPORTANT: To avoid damage to the console, keep liquids away from the console and keep the console out of direct sunlight.**

CONSOLE TROUBLESHOOTING

If the console does not display your heart rate when you hold the handgrip heart rate monitor, or if the displayed heart rate appears to be too high or too low, see step 5 on page 17.

If a replacement power adapter is needed, call the telephone number on the back cover of this manual. IMPORTANT: To avoid damaging the console, use only a manufacturer-supplied regulated power adapter.

CHARGING THE GENERATOR

See EXPLODED DRAWING A on page 34. For best results, charge the internal Battery (139) that powers the Generator (3) once per week. To charge the Battery, plug the Power Adapter (112) into the receptacle on the frame of the exercise bike.

EXERCISE GUIDELINES

⚠ WARNING: Before beginning this or any exercise program, consult your physician. This is especially important for persons over age 35 or persons with pre-existing health problems.

The heart rate monitor is not a medical device. Various factors may affect the accuracy of heart rate readings. The heart rate monitor is intended only as an exercise aid in determining heart rate trends in general.

These guidelines will help you to plan your exercise program. For detailed exercise information, obtain a reputable book or consult your physician. Remember, proper nutrition and adequate rest are essential for successful results.

EXERCISE INTENSITY

Whether your goal is to burn fat or to strengthen your cardiovascular system, exercising at the proper intensity is the key to achieving results. You can use your heart rate as a guide to find the proper intensity level. The chart below shows recommended heart rates for fat burning and aerobic exercise.

165	*155*	*145*	*140*	*130*	*125*	*115*	💗
145	*138*	*130*	*125*	*118*	*110*	*103*	💗
125	*120*	*115*	*110*	*105*	*95*	*90*	♥
20	*30*	*40*	*50*	*60*	*70*	*80*	

To find the proper intensity level, find your age at the bottom of the chart (ages are rounded off to the nearest ten years). The three numbers listed above your age define your "training zone." The lowest number is the heart rate for fat burning, the middle number is the heart rate for maximum fat burning, and the highest number is the heart rate for aerobic exercise.

Burning Fat—To burn fat effectively, you must exercise at a low intensity level for a sustained period of time. During the first few minutes of exercise, your body uses carbohydrate calories for energy. Only after the first few minutes of exercise does your body begin to use stored fat calories for energy. If your goal is to burn fat, adjust the intensity of your exercise until your heart rate is near the lowest number in your training zone. For maximum fat burning, exercise with your heart rate near the middle number in your training zone.

Aerobic Exercise—If your goal is to strengthen your cardiovascular system, you must perform aerobic exercise, which is activity that requires large amounts of oxygen for prolonged periods of time. For aerobic exercise, adjust the intensity of your exercise until your heart rate is near the highest number in your training zone.

WORKOUT GUIDELINES

Warming Up—Start with 5 to 10 minutes of stretching and light exercise. A warm-up increases your body temperature, heart rate, and circulation in preparation for exercise.

Training Zone Exercise—Exercise for 20 to 30 minutes with your heart rate in your training zone. (During the first few weeks of your exercise program, do not keep your heart rate in your training zone for longer than 20 minutes.) Breathe regularly and deeply as you exercise; never hold your breath.

Cooling Down—Finish with 5 to 10 minutes of stretching. Stretching increases the flexibility of your muscles and helps to prevent post-exercise problems.

EXERCISE FREQUENCY

To maintain or improve your condition, complete three workouts each week, with at least one day of rest between workouts. After a few months of regular exercise, you may complete up to five workouts each week, if desired. Remember, the key to success is to make exercise a regular and enjoyable part of your everyday life.

NOTES

PART LIST

Model No. VMEX81414.1 R0916A

Key No.	Qty.	Description
1	1	Frame
2	1	Drive Belt
3	1	Generator
4	4	M6 x 15mm Flange Screw
5	1	Control Board
6	2	M5 x 10mm Screw
7	1	Pulley
8	1	Left Crank Arm
9	1	Right Crank Arm
10	4	M8 x 10mm Screw
11	1	Magnet
12	1	Crank
13	2	M8 x 25mm Screw
14	2	Large Bearing
15	1	Bearing Spacer
16	1	M20 Nut
17	1	Pedal/Strap Set
18	1	Wiring Plate
19	2	Round Screw
20	1	Idler
21	3	Idler Block
22	3	M5 x 15mm Flat Head Screw
23	2	Small Bearing
24	1	20mm C-clip
25	1	Adjustment Hook
26	2	M6 Nut
27	1	Spring
28	2	Wheel
29	2	M8 x 40mm Bolt
30	5	M8 Locknut
31	4	Leveling Foot
32	4	M8 Nut
33	1	Reed Switch Clamp
34	1	Knob Bushing
35	1	Adjustment Knob
36	2	Plastic Sleeve
37	2	47mm Spacer
38	2	M10 x 65mm Bolt
39	2	M16 Washer
40	2	M10 Locknut
41	4	Frame Cap
42	1	Upper Main Wire
43	1	Grommet
44	2	Clamp
45	3	M4 x 10mm Screw
46	2	Seat Post Sleeve
47	1	Reed Switch/Wire
48	1	M6 Washer
49	2	M4 x 8mm Screw
50	1	Seat Post Cover
51	2	M5 x 10mm Flat Head Screw
52	1	Wear Cover
53	5	M5 x 10mm Nickel Screw
54	1	Left Rear Shield
55	1	Right Rear Shield
56	8	M4 x 16mm Screw
57	1	Rear Shield Cover
58	3	Shield Support
59	2	M4 x 76mm Screw
60	1	Control Wire
61	1	Generator Wire
62	2	Crank Cap
63	1	Upper Power Wire
64	1	Lower Power Wire
65	1	M4 x 70mm Screw
66	1	Upright
67	1	Lower TV Coaxial Cable
68	1	Upper TV Coaxial Cable
69	1	Lower Main Wire
70	1	Handlebar
71	2	Control Plate
72	2	Foam Grip
73	2	Grip Plate
74	3	M8 x 16mm Washer
75	2	Control Switch
76	2	M2 x 5mm Screw
77	4	M3 x 25mm Screw
78	1	Left Keypad
79	1	Right Keypad
80	1	Handlebar Cap
81	1	Left Control Key Wire
82	1	Right Control Key Wire
83	1	Pulse Sensor Wire
84	1	Seat Post
85	4	Pulse Grip
86	4	Pulse Plate
87	4	Foam Tape
88	4	M3 x 30mm Bolt
89	4	M5 x 8mm Screw
90	4	M3 Nut
91	1	Seat
92	1	Receptacle Plug
93	1	Front Handlebar Cover
94	1	Rear Handlebar Cover
95	2	Control Grip
96	2	M4 x 8mm Screw
97	3	M4 x 15mm Screw
98	1	Front Upright Cover
99	1	Accessory Tray
100	1	Rear Upright Cover

Key No.	Qty.	Description
101	1	Left Front Shield
102	1	Right Front Shield
103	1	Front Top Cover
104	1	Front Shield Cover
105	1	Front Upright Cover Cap
106	1	Console
107	4	M8 x 20mm Screw
108	4	M8 x 12mm Washer
109	3	M8 x 30mm Screw
110	3	M8 Washer
111	28	M5 x 12mm Screw
112	1	Power Adapter/Wire
113	2	Arc Washer
114	1	Lower Overlay
115	1	USB Bracket
116	1	Terminal Plate
117	1	Smart Shelf
118	1	Console Front
119	1	Console Back
120	1	Tablet Shelf
121	1	LED
122	2	RJ45 Plug
123	1	USB Plug

Key No.	Qty.	Description
124	1	Display
125	1	Upper Overlay
126	10	M3 x 8mm Screw
127	3	M8 x 8mm Machine Screw
128	2	M5 x 8mm Machine Screw
129	4	M8 x 10mm Screw
130	15	M3 x 12mm Screw
131	8	M4 x 12mm Screw
132	1	Pulse Board
133	1	USB Connector
134	2	RJ45 Board
135	1	USB Charging Board
136	1	Heart Rate Monitor Receiver
137	1	Console Board
138	1	Ground Wire
139	1	Battery
140	1	Hook and Loop Fastener
141	1	Power Adapter Board
142	1	Power Adapter Board Wire
143	2	M4 x 6mm Screw
144	2	Standoff
*	–	User’s Manual

Note: Specifications are subject to change without notice. For information about ordering replacement parts, see the back cover of this manual. *These parts are not illustrated.

EXPLODED DRAWING A

Model No. VMEX81414.1 R0916A

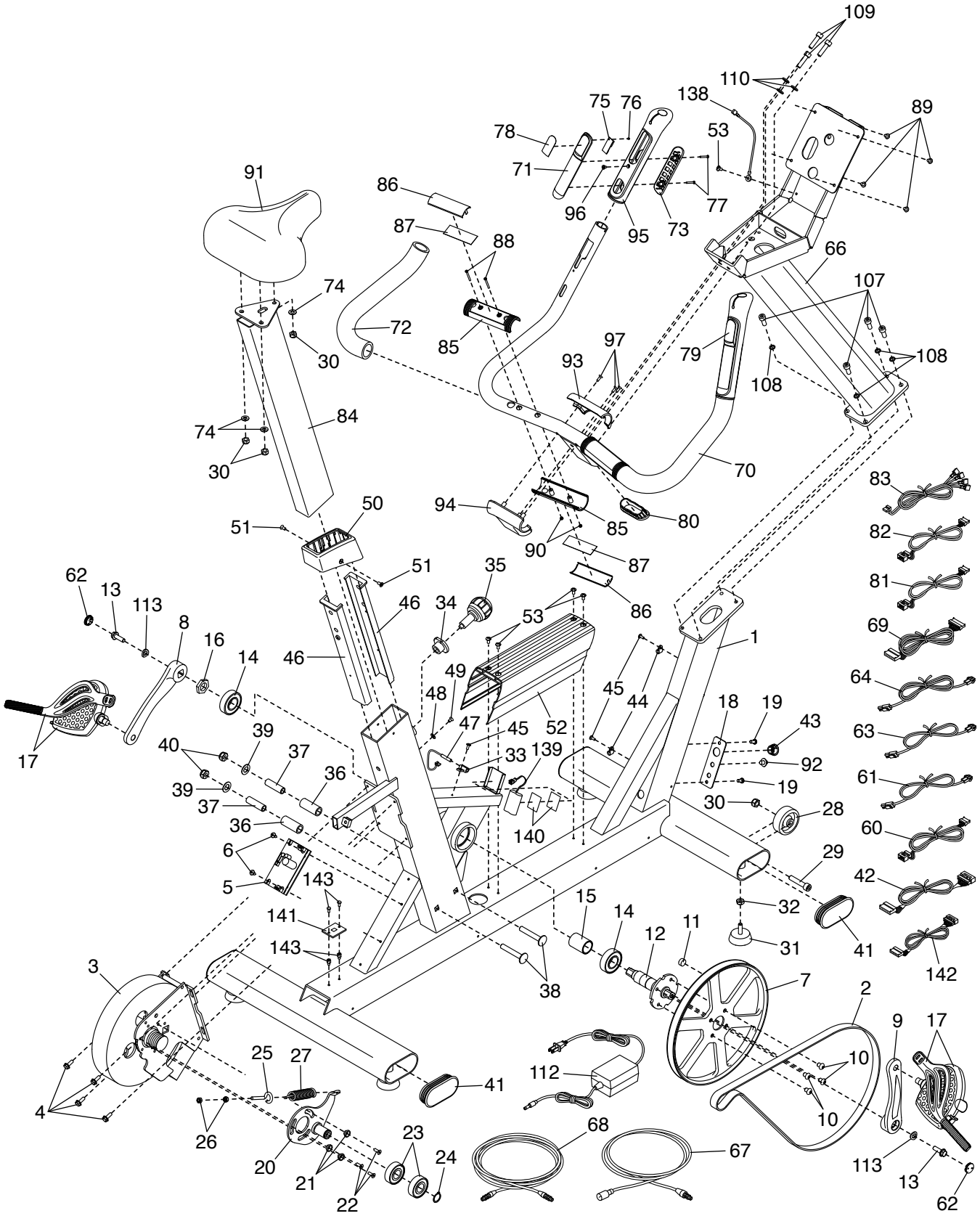

EXPLODED DRAWING B

Model No. VMEX81414.1 R0916A

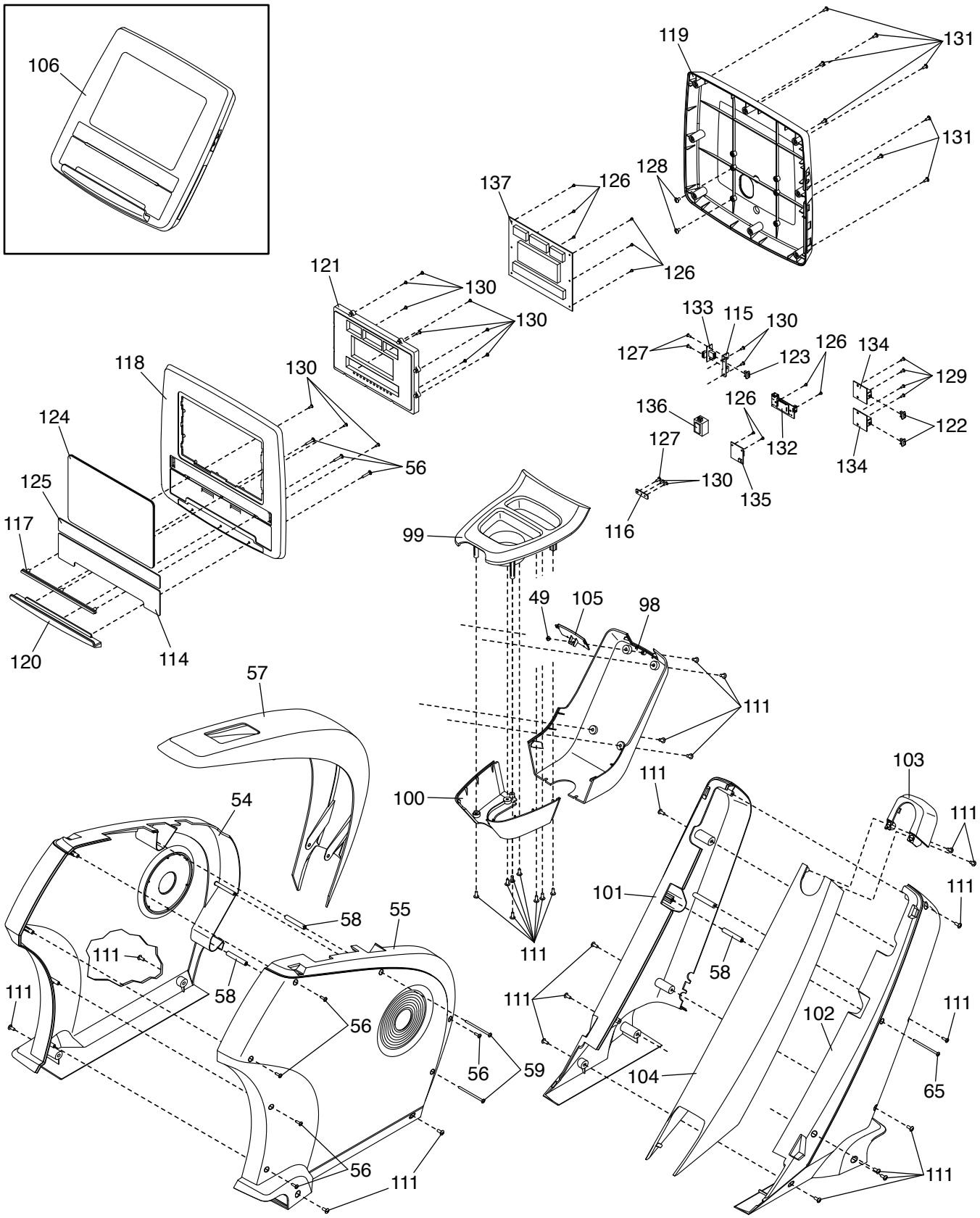

HOW TO CONTACT CUSTOMER CARE

If you have questions after reading this manual, or if parts are damaged or missing, please contact Customer Care at one of the phone numbers or addresses listed below. **Please note the model number, serial number, and name of the product (see the front cover of this manual) before contacting Customer Care. If you are ordering replacement parts, please also note the key number and description of each part (see the PART LIST and the EXPLODED DRAWING near the end of this manual).**

In the United States
Call: 1-800-201-2109, Mon.–Fri. 6 a.m.–6 p.m. MT
Email: customercare@freemotionfitness.com
Write:
FreeMotion Fitness
1500 South 1000 West
Logan, UT 84321-9813
United States

Outside the United States
Call: 001-800-527-5417 or 001-435-786-3521,
Mon.–Fri. 6 a.m.–3 p.m. USA Mountain Time
Email: intlcustomercare@freemotionfitness.com

LIMITED WARRANTY

This product is warranted for use in non-dues-paying institutional settings to include hotels, apartment fitness centers, corporate fitness centers, fire/police stations, and hospital/physical therapy settings. This product is not warranted for use in large, heavy-use settings such as health clubs, colleges/universities, community centers, or military installations; use of this product in such settings or use of this product for more than 6 hours per day will void this warranty.

WARRANTY PERIODS AND COVERAGE
FreeMotion Fitness warrants this product to be free from defects in workmanship and material under normal use and service conditions. Parts and labor are warranted for one (1) year, unless otherwise specified on the invoice.

The warranty period commences on the invoice date of purchase. Any parts repaired or replaced during this warranty period will be warranted for the remainder of the original warranty period.

CONDITIONS AND LIMITATIONS
The following will void the warranty on this product:
1. This warranty applies only to the original owner and is non-transferable.
2. The labor warranty applies only to products sold in the US and Canada. Contact your authorized FreeMotion Fitness dealer for details on labor coverage in your country.
3. Any misuse, abuse, or improper service.
4. Users who weigh more than the maximum user weight listed in this manual.
5. Damage caused by moving the product or improper storage including moving or storing the product on its side.
6. Use or storage of the product outdoors or in high-humidity environments including spa and pool areas.
7. Damage caused by improper wiring or insufficient electrical current. Note: This product may not have wiring.

This warranty shall not apply to the following:
1. Cosmetic items including grips, decals, and labels.
2. Pick-up and delivery or freight charges involved with a repair.
3. Any problem as a result of improper assembly or delivery.

WHAT TO DO IF SERVICE IS REQUIRED
FreeMotion Fitness warranty service may be obtained by contacting the authorized dealer from which you purchased this product. Make sure to retain your original invoice and serial number information. If this product experiences a failure under the warranty terms set forth, FreeMotion Fitness shall provide at their option either repair, replacement, or refund of the purchase price. FreeMotion Fitness compensates service providers for warranty trips within their service area. You may be charged additionally for service calls beyond this service area.

FreeMotion Fitness is not responsible or liable for indirect, special, or consequential damages arising out of or in connection with the use or performance of the product; damages with respect to any economic loss, loss of property, loss of revenues or profits, loss of enjoyment or use, or cost of removal or installation; or other consequential damages. Some regions do not allow the exclusion or limitation of consequential damages. Accordingly, the above limitation may not apply to you. This warranty gives you specific rights, and you may have other rights that vary from region to region.

TO CONTACT FREEMOTION FITNESS
See HOW TO CONTACT CUSTOMER CARE above.

Part No. 378467 R0916A
Printed in Taiwan © 2016 ICON Health & Fitness, Inc.