Quicklag® Residential Circuit Breakers

Type BR Plug-in Molded Case Circuit Breakers
10-100 Amperes, 240/415 Volts, 40°C
(50°C Rating Available)
Built to BS3871, Part 1

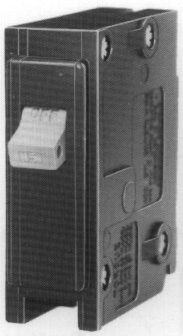

1 Pole
Type BR

2 Pole
Type BR

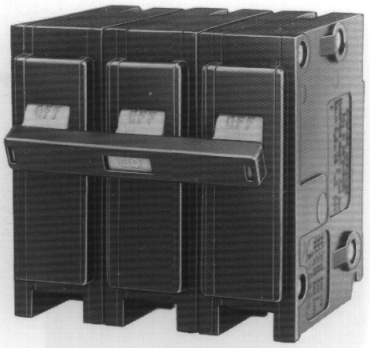

3 Pole
Type BR

Interrupting Ratings

Stand-alone Interrupting Ratings:
M3 (3,000 AIC)

Series Interrupting Ratings:
Available in combination with larger Westinghouse molded case circuit breakers.

10 KAIC

Specifications

- Modular Circuit Breakers: 25 mm (1 inch) module.
- Current Ratings: 10 to 100 Amps; 1, 2, and 3 poles.
- Thermal-Magnetic design.
- Maximum operating voltages: 240/415 VAC.
- Toggle Handle indicates 'ON', 'OFF' and 'TRIPPED' positions.
- Trip free mechanism in every pole.
- All multi-pole breakers incorporate internal common trip mechanism.
- Ampere ratings clearly visible on handles.
- All ferrous metal parts plated to resist corrosion.
- No internal aluminum parts.
- AB DE-ION Arcs36Extinguishers in every pole.
- Steel frame construction used in every pole.

Selection Data and Catalog Numbers

Cont. Amp Rating	Catalog Numbers 1 Pole	2 Poles	3 Poles
BS3871-Part 1 240/415 VAC	M3	M3	M3
Type BR Plug-in Thermal-Magnetic Circuit Breakers			
15	BR115	BR215	BR315
20	BR120	BR220	BR320
25	BR125	BR225	BR325
30	BR130	BR230	BR330
40	BR140	BR240	BR340
50	BR150	BR250	BR350
60	BR160	BR260	BR360
70	BR170	BR270	BR370
90	.....	BR290	BR390
100	.....	BR2100	BR3100

Descriptive Bulletin
FTC-100M3

Quicklag® Residential Circuit Breakers

Typical Exploded View (Type P Plug-in Breaker Shown)

1 Pole

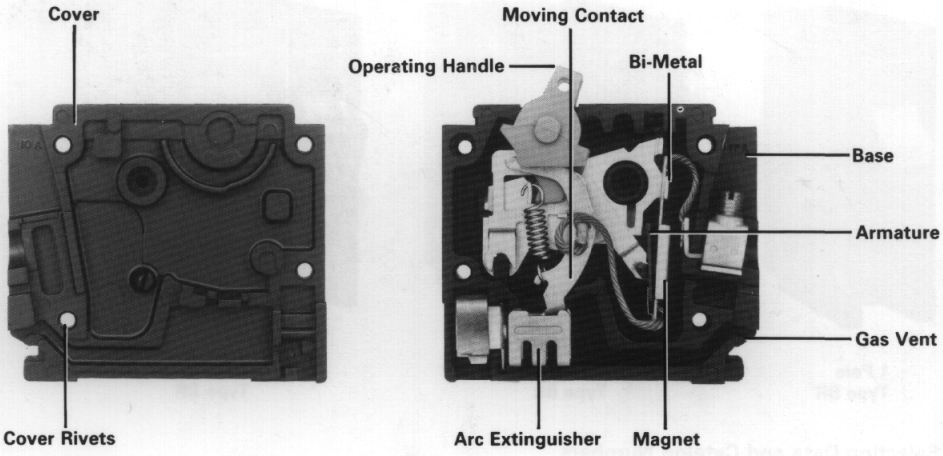

Dimensions, Millimeters① *Not to be used for construction purposes.*

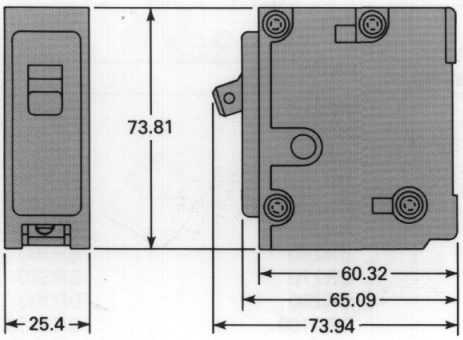

Type BR

① 2-pole breaker is 50.8 mm wide, 3-pole is 75.9 mm wide.

Series Rating Combination

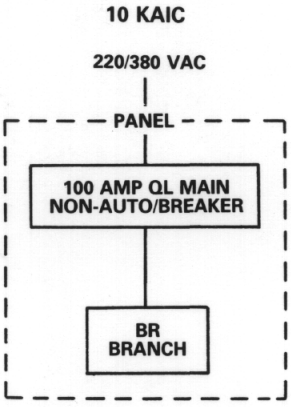

Circuit Breaker Mounting Type BR (Plug-in):
The load end of the breaker is inserted under the mounting clamp of a panelboard and the line end is merely snapped into position over the bus stab.

Circuit Breaker Removal
Before inspecting, installing or removing from a circuit, the circuit breaker should be in the "OFF" position, and if practical, the circuit should be de-energized.

Inspection and Maintenance
Good maintenance procedure calls for periodic inspection of all electrical apparatus including molded case circuit breakers. Terminal lugs must be tight to prevent overheating. Due to the inherent wiping action built into the moving contacts of all Westinghouse circuit breakers, operating the breaker several times under load will remove any high resistance film that may have formed.

Accesssories and Modifications
Accessories and modifications available include: lockdog, handle locks for use with a padlock, moisture and fungus treatment, shunt trip breakers, and earth leakage breakers for special applications.